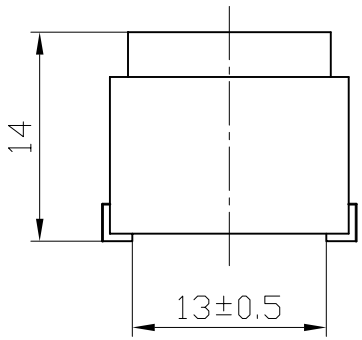

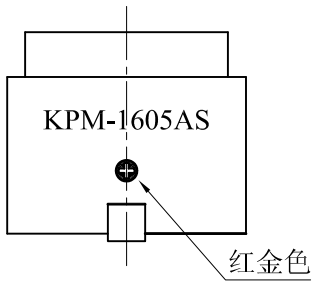

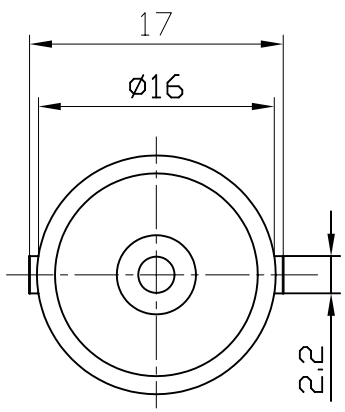

SPECIFICATION

1.Rated Voltage .....5 V
2.Operating Voltage ..... 4~8 V
3.Max.Rated Current 40mA
4.Min.Sound Pressure Level 85dB/10cm
5.Coil Resistance..... 50±5 Ω
6.Coil Impedance..... 110 Ω
7.Resonant Frequency 2048Hz
8.Case Material ..... MPPO
9.Operating Temperature ..... -20～+70°
10.Store Temperature ..... -30～+80°
11.Weight 7g

No.	DESCRIPTION	APPROVED	DATE

TOLERANCES UNLESS NOTED OTHERWISE
.X ±
.XX ±
.XXX ±
90° FORMED +2° ANGLES -1°
FIRST ANGLE PROJECTION

APPROVALS	DATE
DRAWN	
CHECKED	
APPROVED	05.05.06

KEPO NINGBO KEEP IMPROVING ELECTRONIC CO.,LTD
http://www.chinaacoustic.com

Magnetic Buzzer
KPM-1605AS

UNIT mm | DWG NO. KP3.840.713
SCALE NOT TO SCALE | SHEET | VER 1.2