DESCRIPTION

Brightking's LES16C05L08 has been specifically designed to protect sensitive components which are connected to data and transmission lines from overvoltage caused by electrostatic discharge (ESD), electrical fast transients (EFT), and lightning.
The low capacitance array configuration allows the user to protect eight high-speed data or I/O lines.The high surge capability (500W,tp=8/20us) makes the series suitable for telecommunication systems operating in harsh transient environments. The low inductance contruction minimizes voltage overshoot during high current surges.

HBM : ±8kV
Air Mode : ±15kV

SPECIFICATION FEATURES

- IEC61000-4-2 ESD 15KV Air,8KV contact compliance
- SOIC-16 surface mount package
- Protects eight I/O lines
- Peak power dissipation of 500W under 8/20μs waveform
- Working voltage : 5V
- Low leakage current
- Low capacitance and clamping voltages
- Solid-state silicon avalanche technology
- Lead Free/RoHS compliant
- Solder reflow temperature:Pure Tin-Sn,260-270℃
- Flammability rating UL 94V-0

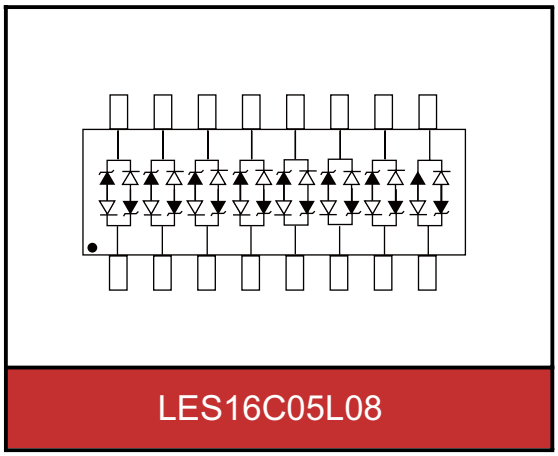

APPLICATIONS

- Wireless communication circuit
- WAN equipment
  - CSU / DSU
  - Multiplexers
  - Routers
  - ISP equipment
- RS-232 (V.28)
- RS-422 (V.11,X.21)
- Ethernet-10/100 base T
- Low-voltage ASICs

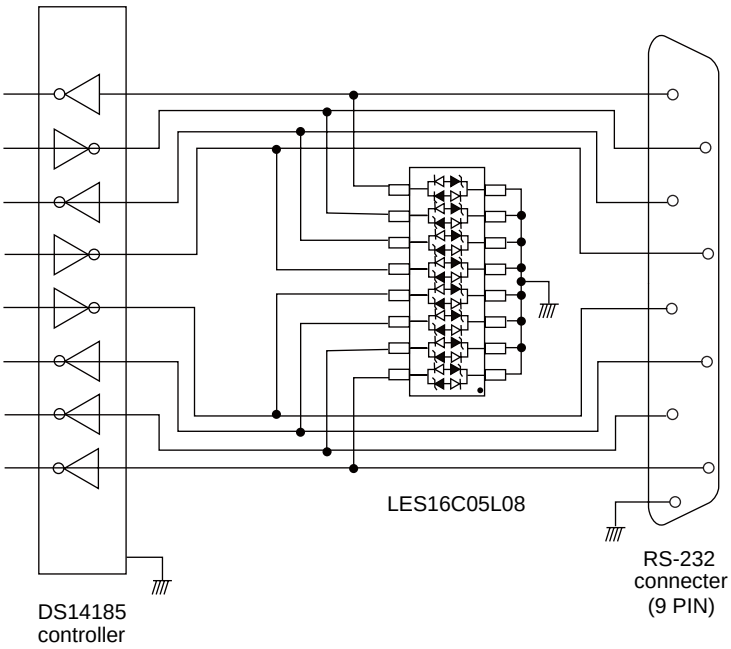

MAXIMUM RATINGS

Rating	Symbol	Value	Unit
Peak pulse power (tp=8/20μs waveform)	Ppp	500	W
ESD voltage (HBM contact)	V_{ESD}	±8	KV
ESD voltage (AIR contact)		±15	
Storage & operating temperature range	T_{STG} ,T_J	-55~+150	℃

ELECTRICAL CHARACTERISTICS (T_J=25℃)

LES16C05L08 (Marking:B 16LCC05-8)

Parameter	Symbol	Condition	Min.	Typ.	Max.	Unit
Reverse stand-off voltage	V_{RWM}				5	V
Reverse breakdown voltage	V_{BR}	I_{BR}=1mA	6			V
Reverse leakage current	I_R	V_R=5V each I/O pin			10	μA
Clamping voltage (tp=8/20μs)	V_C	I_{PP}=1A			9.8	V
Clamping voltage (tp=8/20μs)	V_C	I_{PP}=10A			17	V
Off state junction capacitance	C_J	0Vdc,f=1MHZ between I/O pins and GND			15	pF

TYPICAL CHARACTERISTICS CURVES

Figure 1. Power Derating Curve

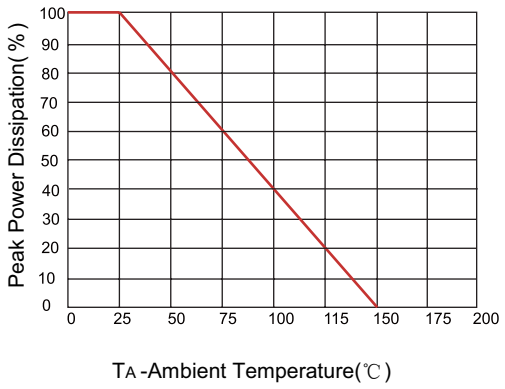

Figure 2. Pulse Waveforms

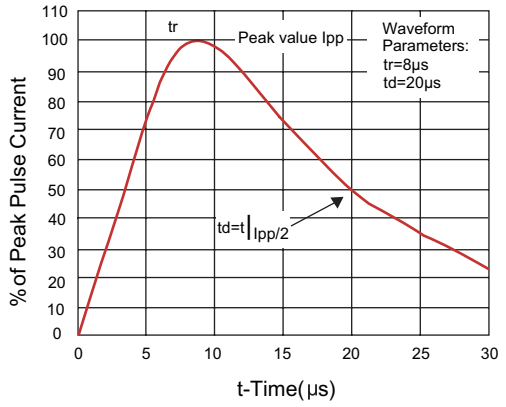

Figure 3. Non-Repetitive Peak Pulse vs Pulse Time

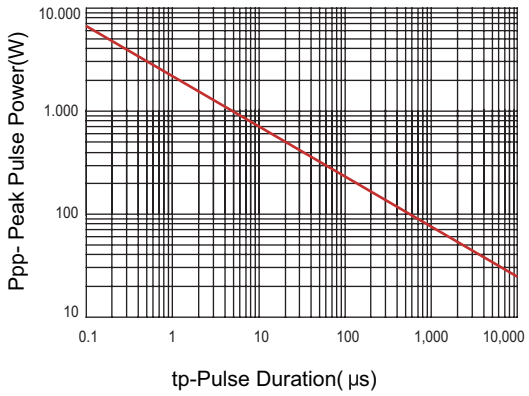

Figure 4. Capacitance vs. Reverse Voltage

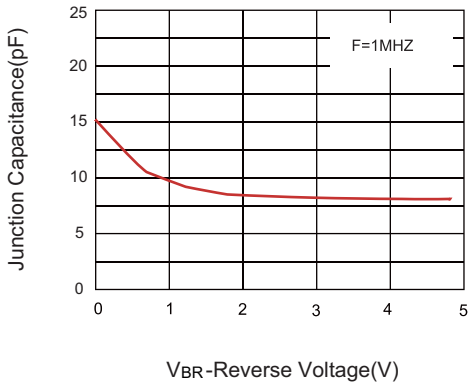

PACKAGE AND SUGGESTED PAD LAYOUT DIMENSION

SOIC-16(unit:mm)

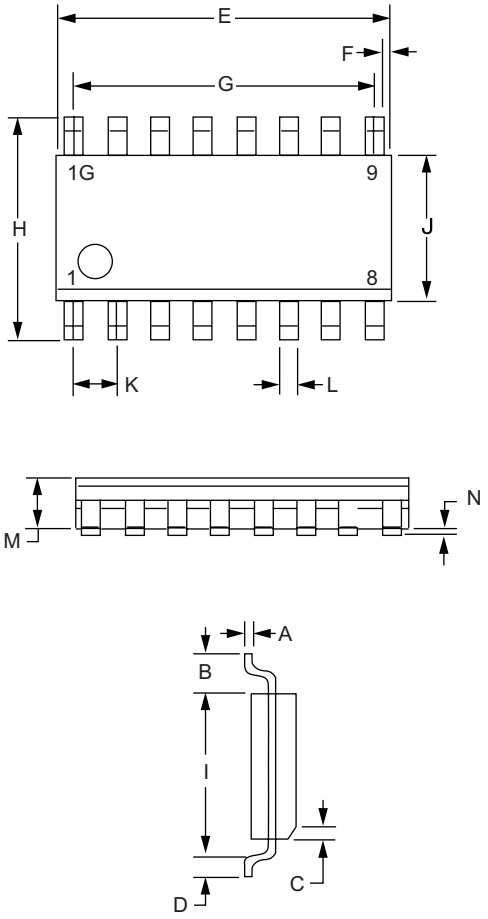

DIMENSIONS				
SYMBOL	INCHES		MILLIMETERS	
	MIN	MAX	MIN	MAX
A	0.007	0.010	0.19	0.25
B	0.041		1.04	
C	0.010	0.020	0.25	0.50
D	0.020	0.035	0.50	0.90
E	0.386	0.394	9.80	10.0
F	0.010		0.25	
G	0.350		8.89	
H	0.228	0.244	5.80	6.20
J	0.150	0.157	3.80	4.00
K	0.050		1.27	
L	0.014	0.020	0.35	0.51
M	0.053	0.069	1.35	1.75
N	0.004	0.010	0.10	0.25