DESCRIPTION

Brightking's UDT23A05L02 component is ultra low capacitance TVS arrays designed to protect high speed data interfaces.This series has been spe--cifically designed to protect sensitive components which are connected to high speed data and transmission lines from overvoltage caused by ESD (electrostatic discharge),CDE(cable discharge events),and EFT(electrical fast transients).

The series has a typical capacitance of only 0.8pF(typ.).

This means it can be used on circuits operating in excess of 3GHz without signal attenuation.

HBM : ±8kV
Air Mode : ±15kV

SPECIFICATION FEATURES

- IEC61000-4-2 ESD 15KV Air,8KV contact compliance
- Small SOT-23 surface mount package
- Protects two high speed data line
- Peak power dissipation of 400W under 8/20μs waveform
- Working voltage : 5V
- Low leakage current
- Ultra low capacitance and clamping voltages
- Solid-state silicon avalanche technology
- Lead Free/RoHS compliant
- Solder reflow temperature:Pure Tin-Sn,260-270℃
- Flammability rating UL 94V-0

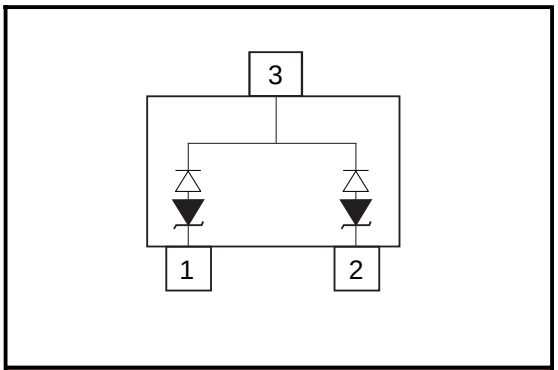

APPLICATIONS

- HDMI interface protection
- Mobile display digital interface
- RF/Antenna circuits
- USB 2.0 & Firewire ports
- GaAs photodetector protection
- HBT power Amp protection
- Infiniband transceiver protection

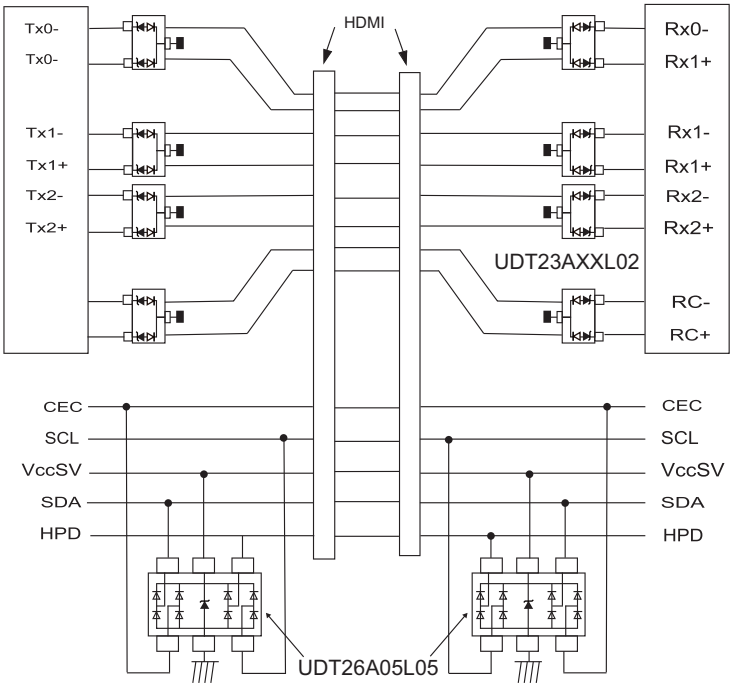

MAXIMUM RATINGS

Rating	Symbol	Value	Unit
Peak pulse power (tp=8/20μs waveform)	Ppp	400	W
ESD voltage (HBM contact)	V_{ESD}	±8	KV
ESD voltage (AIR contact)		±15	
Storage & operating temperature range	T_{STG} ,T_J	-55~+150	℃

ELECTRICAL CHARACTERISTICS (T_J=25℃)

UDT23A05L02 (Marking : B LTC or T2S)

Parameter	Symbol	Condition	Min.	Typ.	Max.	Unit
Reverse stand-off voltage	V_{RWM}				5	V
Reverse breakdown voltage	V_{BR}	I_{BR}=1mA	6			V
Reverse leakage current	I_R	V_R=5V each I/O pin			5	μA
Clamping voltage (tp=8/20μs)	V_C	I_{PP}=1A			12	V
Off state junction capacitance	C_J	0Vdc,f=1MHZ between I/O pins and GND		0.8		pF

TYPICAL CHARACTERISTICS CURVES

Figure 1. Power Derating Curve

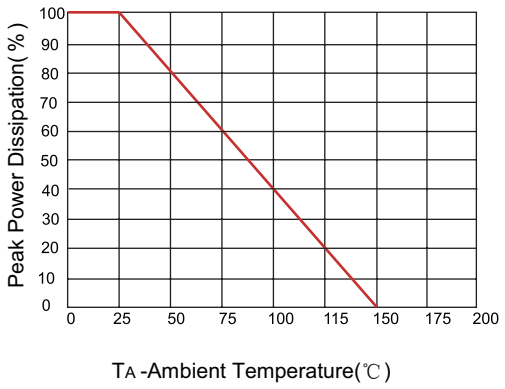

Figure 2. Pulse Waveforms

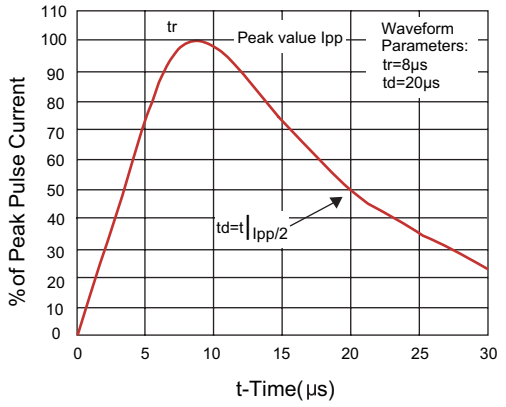

Figure 3. Non-Repetitive Peak Pulse vs Pulse Time

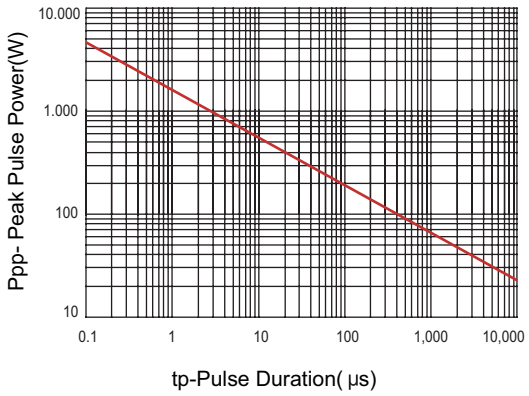

Figure 4. Forward Voltage vs. Forward Current

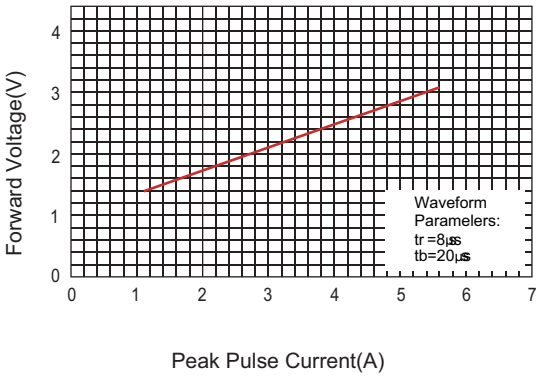

PACKAGE AND SUGGESTED PAD LAYOUT DIMENSION

SOT-23(unit:mm)

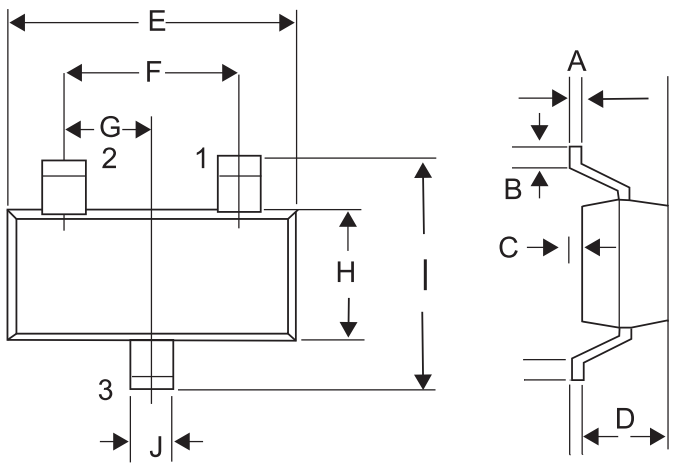
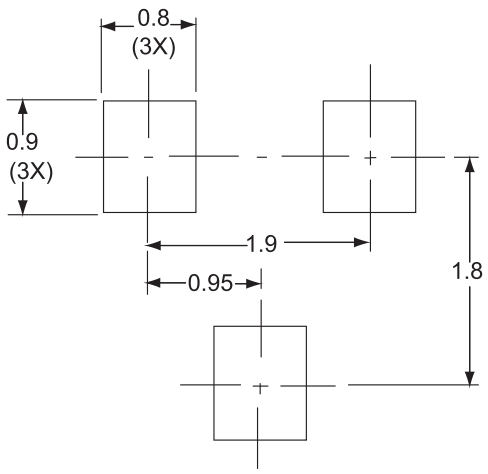
DIMENSIONS				
SYMBOL	INCHES		MILLIMETERS	
	MIN	MAX	MIN	MAX
A	0.003	0.007	0.08	0.18
B	0.006	-	0.15	-
C	-	0.005	-	0.13
D	0.035	0.043	0.89	1.09
E	0.110	0.120	2.80	3.05
F	0.075		1.90	
G	0.037		0.95	
H	0.047	0.055	1.19	1.40
I	0.083	0.098	2.10	2.49
J	0.014	0.020	0.35	0.50