WE05-4RV

Transient Voltage Suppressor

Features

- Solid-state silicon-avalanche technology
- 150 Watts Peak Pulse Power per Line (t_p=8/20μs)
- Low operating and clamping voltage
- Up to four I/O Lines of Protection
- Ultra low capacitance: 1.5pF
- Low Leakage
- Low operating voltage:5V

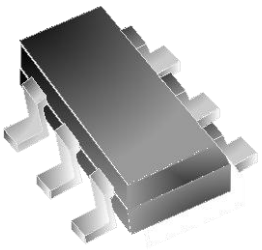

SOT-23-6L

IEC COMPATIBILITY (EN61000-4)

- **IEC 61000-4-2 (ESD) ±15kV (air), ±8kV (contact)**
- **IEC 61000-4-4 (EFT) 40A (5/50ns)**
- **IEC 61000-4-5 (Lightning) 6A (8/20μs)**

Mechanical Characteristics

- SOT-23-6L package
- Molding compound flammability rating: UL 94V-0
- Marking: Marking Code
- Packaging: Tape and Reel
- RoHS/WEEE Compliant

Applications

- Video/Graphics Card
- Handheld & Portable Electronics
- PC/Notebook USB2.0/IEEE1394 ports
- 10/100/1000 Ethernet
- DVI interfaces
- Wireless data (WAN/LAN) systems

Circuit Diagram

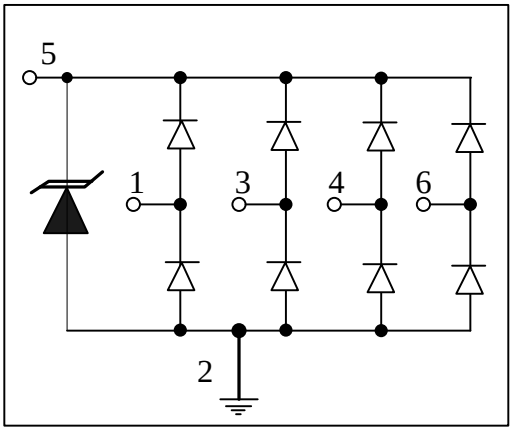

Schematic & PIN Configuration

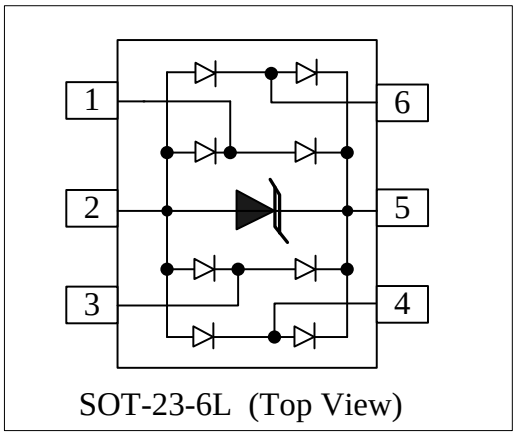

SOT-23-6L (Top View)

Absolute Maximum Rating			
Rating	**Symbol**	**Value**	**Units**
Peak Pulse Power (t_p =8/20μs)	P_{PP}	150	Watts
Peak Pulse Current (t_p =8/20μs)	I_{pp}	6	A
Operating Temperature	T_J	-55 to + 125	℃
Storage Temperature	T_{STG}	-55 to +150	℃

Electrical Parameters (T=25℃)

Symbol	Parameter
I_{PP}	Maximum Reverse Peak Pulse Current
V_C	Clamping Voltage @ I_{PP}
V_{RWM}	Working Peak Reverse Voltage
I_R	Maximum Reverse Leakage Current @ V_{RWM}
V_{BR}	Breakdown Voltage @ I_T
I_T	Test Current
I_F	Forward Current
V_F	Forward Voltage @ I_F

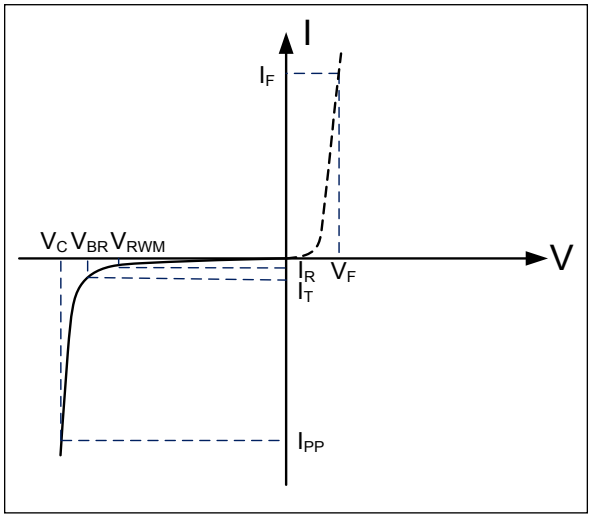

Electrical Characteristics

WE05-4RV						
Parameter	**Symbol**	**Conditions**	**Minimum**	**Typical**	**Maximum**	**Units**
Reverse Stand-Off Voltage	V_{RWM}	Pin5 to pin2			5.0	V
Reverse Breakdown Voltage	V_{BR}	I_T=1mA Pin 5 to pin2	6.0			V
Reverse Leakage Current	I_R	V_{RWM}=5V,T=25℃ Pin 5 to pin2			5.0	μA
Forward Voltage	V_F	IT=10mA			1.2	V
Clamping Voltage	V_C	I_{PP}=6A,t_p=8/20μs I/O pin to GND			25	V
Junction Capacitance	C_j	VR = 0V, f = 1MHz I/O pin to GND		3.0		pF
		VR = 0V, f = 1MHz Between I/O pins		1.5		pF

Typical Characteristics

Figure 1: Peak Pulse Power vs. Pulse Time

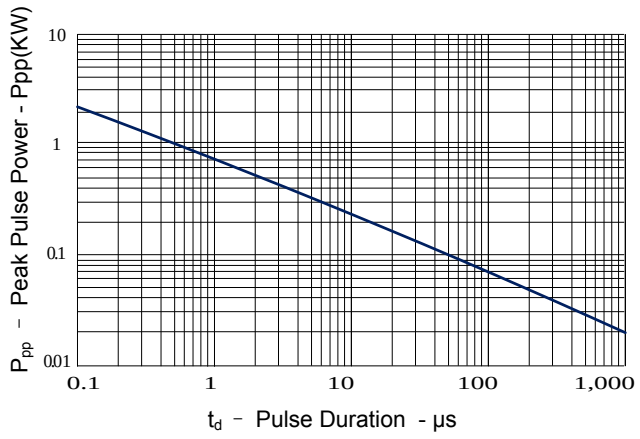

Figure 2: Power Derating Curve

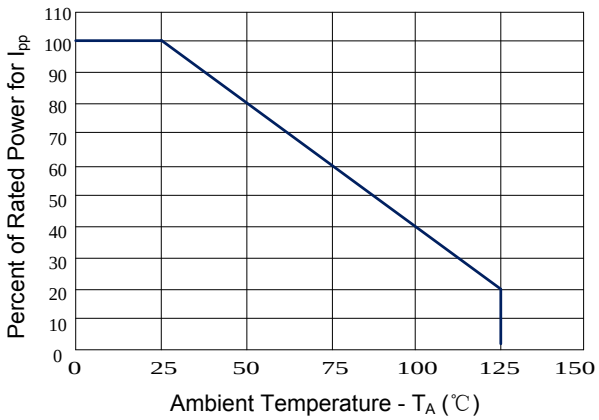

Figure 3: Pulse Waveform

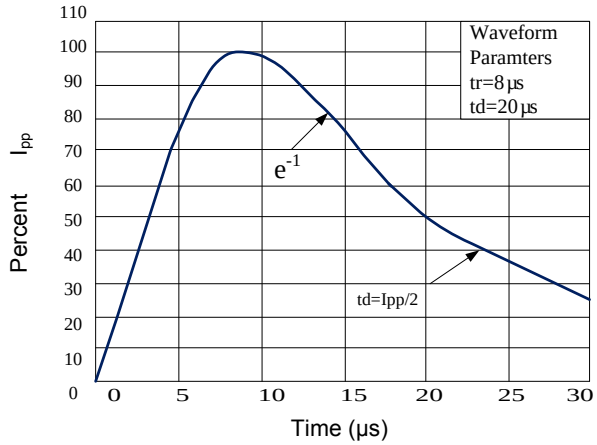

Figure 4: Clamping Voltage vs. Peak Pulse Current

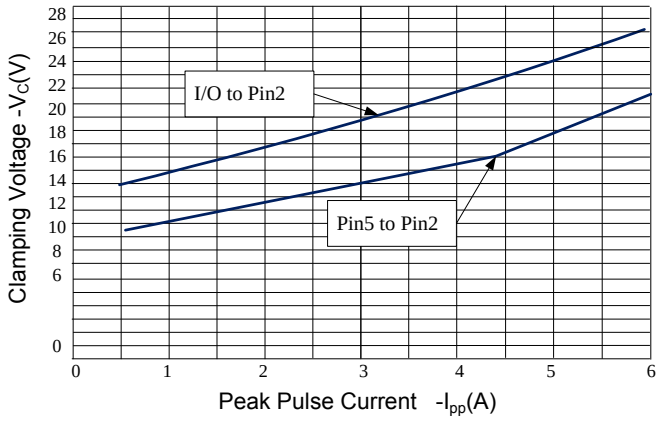

Figure 5: Capacitance vs. Reverse Voltage

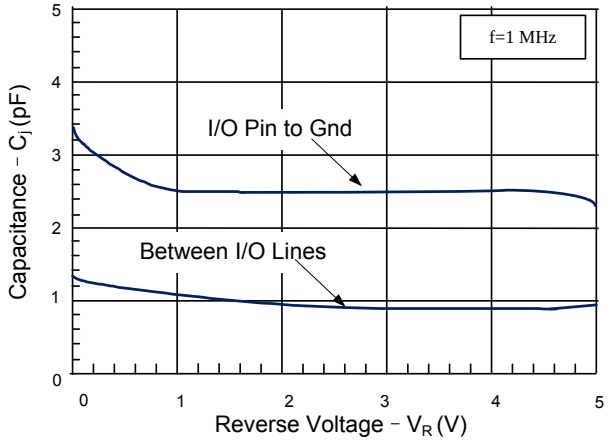

Figure 6: Forward Voltage vs. Forward Current

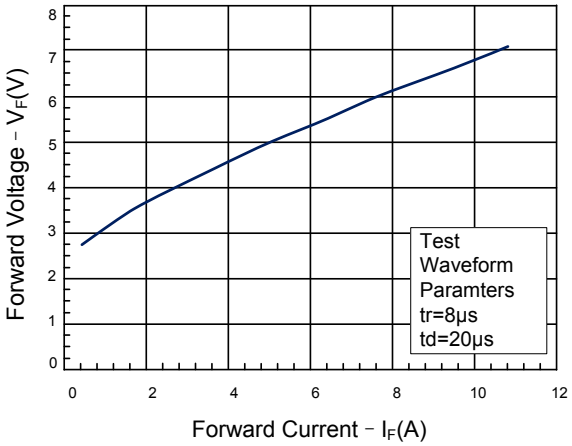

Application Information

Device Connection Options for Protection of Four High-Speed Data Lines

The WE05-4RV TVS is designed to protect four data lines from transient over-voltages by clamping them to a fixed reference. When the voltage on the protected line exceeds the reference voltage (plus diode V_F) the steering diodes are forward biased, conducting the transient current away from the sensitive circuitry. Data lines are connected at pins 1, 3, 4 and 6. The negative reference (REF1) is connected at pin 2. This pin should be connected directly to a ground plane on the board for best results. The path length is kept as short as possible to minimize parasitic inductance. The positive reference (REF2) is connected at pin 5. The options for connecting the positive reference are as follows:

1. To protect data lines and the power line, connect pin 4 directly to the positive supply rail (Vcc). In this configuration the data lines are referenced to the supply voltage. The internal TVS diode prevents over- voltage to the supply rail.

Data Line and Power Supply Protection Using V_{CC} as reference

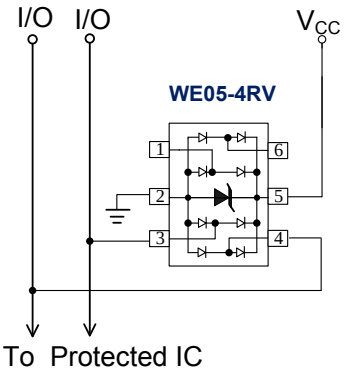

2. The WE05-4RV can be isolated from the power supply by adding a series resistor between pin 4 and V_{CC}. A value of 100kΩ is recommended. The internal TVS and steering diodes remains biased, providing the advantage of lower capacitance.

Data Line Protection with Bias and Power Supply Isolation Resistor

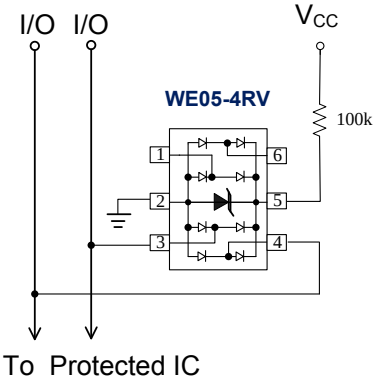

3. In applications where no positive supply reference is available, or complete supply isolation is desired, the internal TVS may be used as the reference. In this case, pin 4 is not connected. The steering diodes will begin to conduct when the voltage on the protected line exceeds the working voltage of the TVS (plus one diode drop).

Data Line Protection Using Internal TVS Diode as Reference

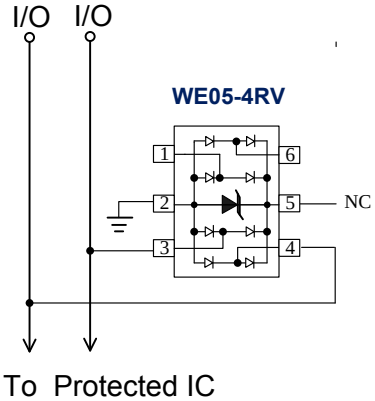

Typical Applications

Video Interface Protection

Video interfaces are susceptible to transient voltages resulting from electrostatic discharge (ESD) and "hot plugging" cables. If left unprotected, the video interface IC may be damaged or even destroyed. Protecting a high-speed video port presents some unique challenges. First, any added protection device must have extremely low capacitance and low leakage current so that the integrity of the video signal is not compromised. Second, the protection component must be able to absorb high voltage transients without damage or degradation. As a minimum, the device should be rated to handle ESD voltages per IEC 61000-4-2, level 4 (±15kV air, ±8kV contact). The clamping voltage of the device (when conducting high current ESD pulses) must be sufficiently low enough to protect the sensitive CMOS IC. If the clamping voltage is too high, the "protected" device may latch-up or be destroyed. Finally, the device must take up a relatively small amount of board space, particularly in portable applications such as notebooks and handhelds. The WE05-4RV is designed to meet or exceed all of the above criteria. A typical video interface protection circuit is shown in Figure 1. All exposed lines are protected including R, G, B, H-Sync, V-Sync , and the ID lines for plug and play monitors.

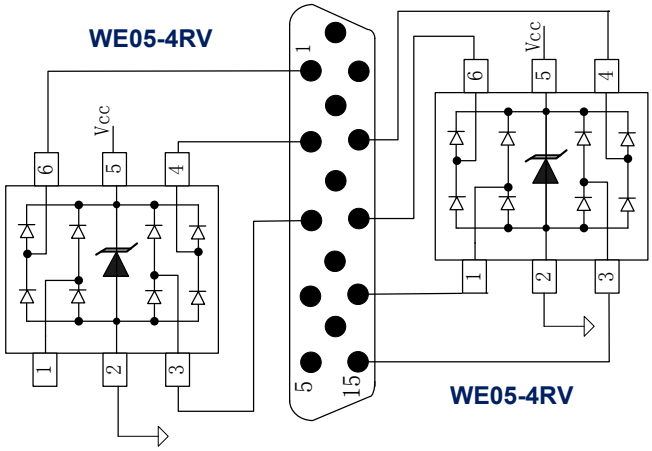

Figure 1 Video Interface Protection

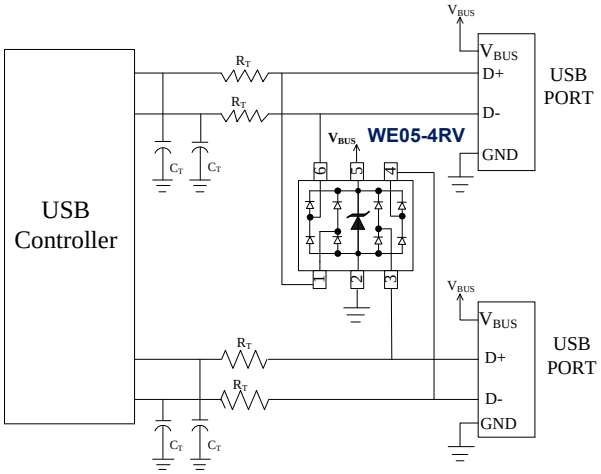

Figure 2 Dual USB Port Protection

Universal Serial Bus ESD Protection

The WE05-4RV may also be used to protect the USB ports on monitors, computers, peripherals or portable systems. Each device will protect up to two USB ports (Figure 2). When the voltage on the data lines exceed the bus voltage (plus one diode drop), the internal rectifiers are forward biased conducting the transient current away from the protected controller chip. The TVS diode directs the surge to ground. The TVS diode also acts to suppress ESD strikes directly on the voltage bus. Thus, both power and data pins are protected with a single device.

Outline Drawing – SOT-23-6L

PACKAGE OUTLINE

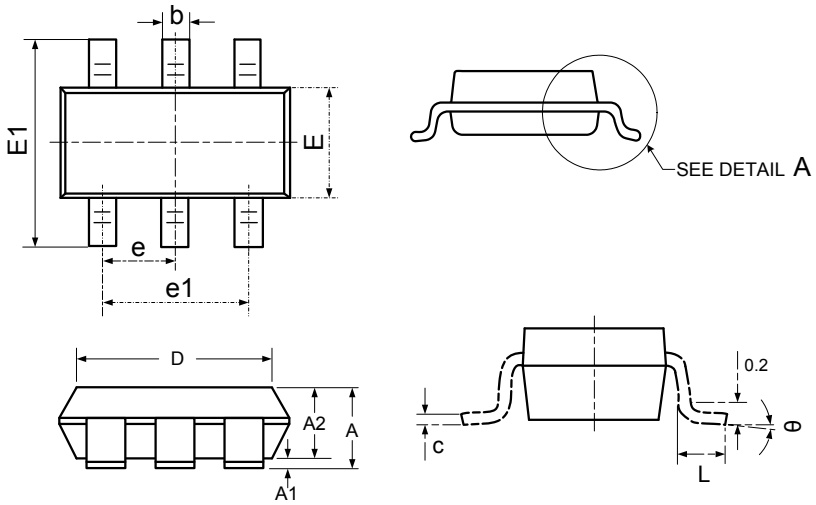

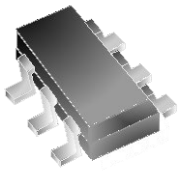

SOT-23-6L

DIMENSIONS

SYMBOL	INCHES		MILLIMETER	
	MIN	MAX	MIN	MAX
A	0.041	0.049	1.050	1.250
A1	0.000	0.004	0.000	0.100
A2	0.041	0.045	1.050	1.150
D	0.111	0.119	2.820	3.020
E	0.059	0.067	1.500	1.700
E1	0.104	0.116	2.650	2.950
e	0.037(BSC)		0.950(BSC)	
e1	0.071	0.079	1.800	2.000
L	0.012	0.024	0.300	0.600
θ	0°	8°	0°	8°

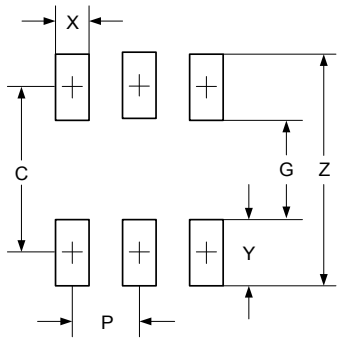

DIMENSIONS		
DIM	INCHES	MILLIMETERS
Z	0.141	3.60
G	0.055	1.40
P	0.037	0.95
X	0.024	0.60
Y	0.043	1.10
C	(0.098)	(2.50)

Notes

THIS LAND PATTERN IS FOR REFERENCE PURPOSES ONLY. CONSULT YOUR MANUFACTURING GROUP TO ENSURE YOUR COMPANY'S MANUFACTURING GUIDELINES ARE MET.

Marking Codes
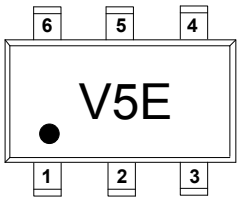
Part Number	WE05-4RV
Marking Code	V5E