ST2221C

Version : A.004
Issue Date : 2002/06/14
File Name : SP-ST2221C-A.004.doc
Total Pages : 17

16-Bit Constant Current LED Drivers

SiTI

ST2221C

16-Bit Constant Current LED Drivers

General Description

The ST2221C is specifically designed for LED and LED DISPLAY constant current drivers. The value of constant current can be varied using an external resistor (I_{out} = 5 ~90mA). The devices include a 16-bit shift registers, latches, and constant current drivers on a single Silicon CMOS chip.

Features

- Constant Current Output : Current with one resistor for 5mA to 90mA
- Maximum Clock Frequency : 25MHz (Cascade Operation)
- 5V CMOS Compatible Input
- Package : DIP24 , SOP24, SSOP24
- Constant Current Matching: (Ta = 25°C、V_{DD} = 5.0V)
  Bit-to-Bit: ± 6.0%、Chip-to-Chip : ± 10.0%、
  @ I_{OUT} = 5 ~ 90mA

Pin Connection (Top view)

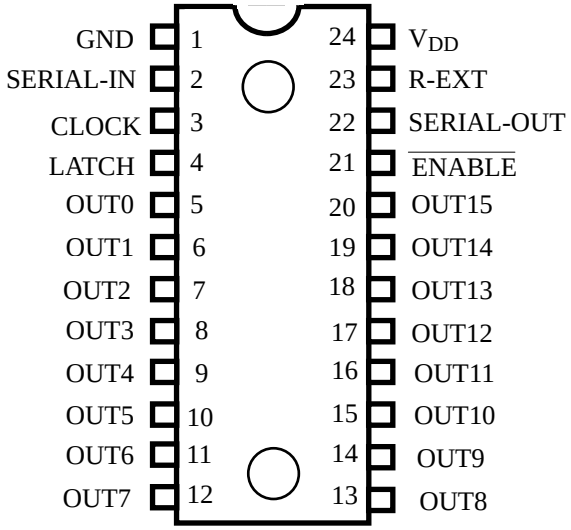

Block Diagram

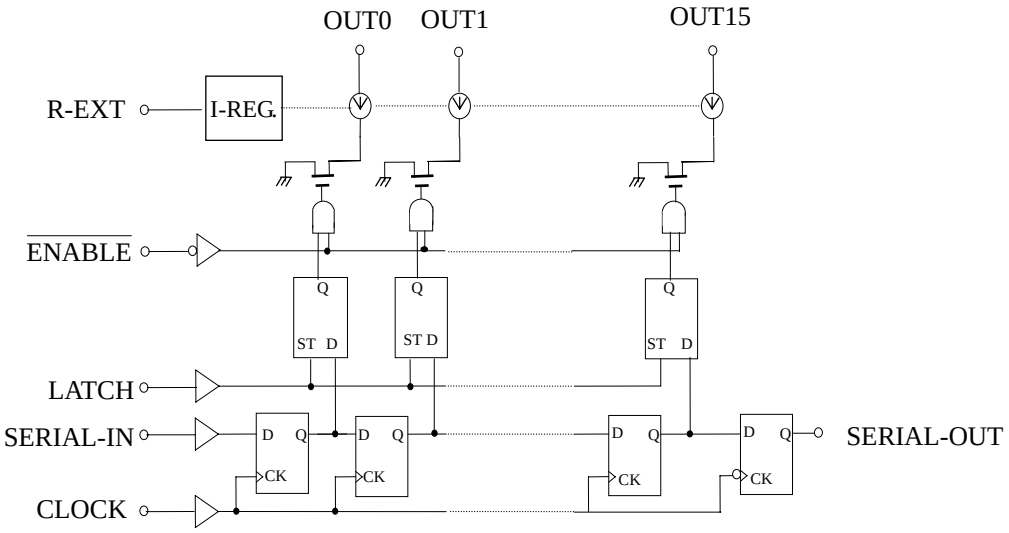

Timing Diagram

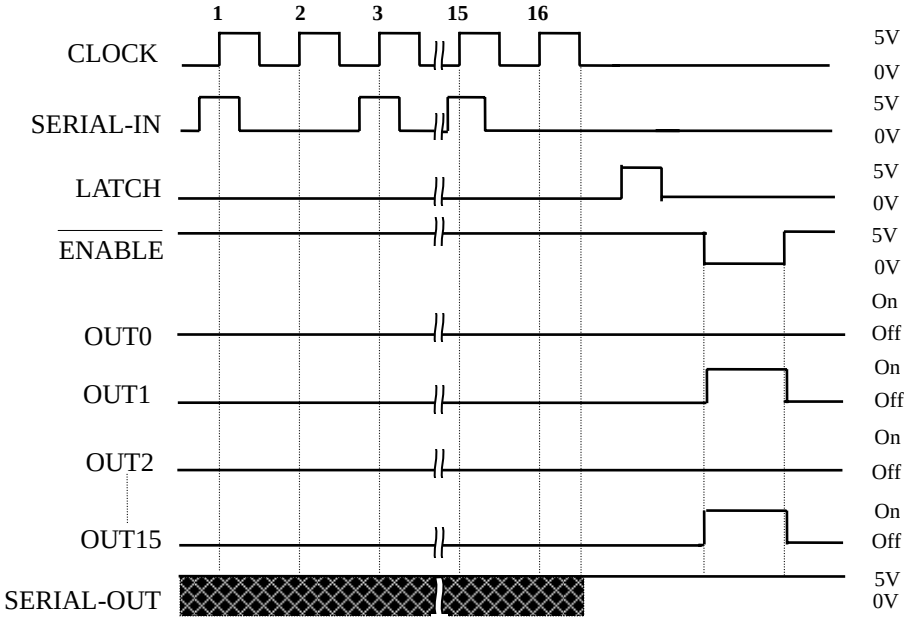

(Note) Latches are level sensitive (not edge triggered).

LATCH-terminal = H level, latches become transparent; LATCH-terminal = L level, latches hold data.

$\overline{\text{ENABLE}}$-terminal = H level, all outputs (OUT0~15) are off.

An external resistor is connected between R-EXT and GND for setting up the value of constant current.

SERIAL-OUT changes state on the falling edges of clock.

Pin Description

PIN No.	PIN NAME	FUNCTION
1	GND	Ground terminal
2	SERIAL-IN	Input terminal of a data shift register
3	CLOCK	Input terminal of a clock for shift register
4	LATCH	Input terminal of data strobe
5~20	OUT0~15	Output terminals
21	$\overline{\text{ENABLE}}$	Input terminal of output enable (active low)
22	SERIAL-OUT	Output terminal of a data shift register
23	R-EXT	Input terminal of an external resistor
24	V_{DD}	5V Supply voltage terminal

Equivalent Circuit of Inputs and Outputs

1. $\overline{\text{ENABLE}}$ terminal

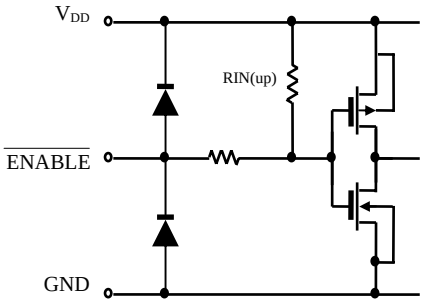

2. LATCH terminal

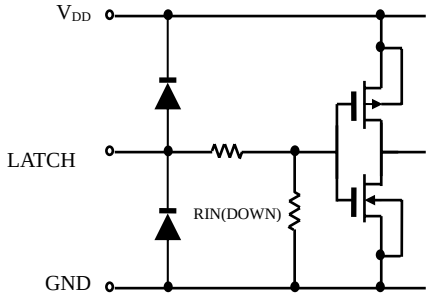

3. CLOCK, SERIAL-IN terminal

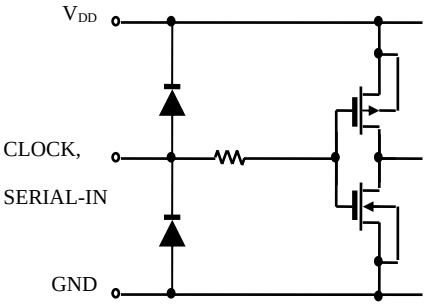

4. SERIAL-OUT terminal

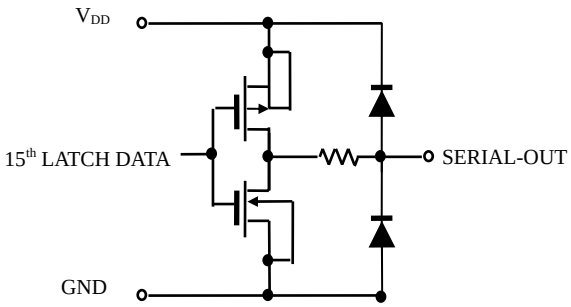

Maximum Ratings (Ta = 25°C, $T_{j(max)}$ = 140°C)

CHARACTERISTIC	SYMBOL	RATING	UNIT
Supply Voltage	V_{DD}	0 ~ 7.0	V
Input Voltage	V_{IN}	-0.4 ~ VDD+0.4	V
Output Current	I_{OUT}	90	mA
Output Voltage	V_{OUT}	-0.5 ~ 9.5	V
Clock Frequency	f_{CLK}	25	MHz
GND Terminal Current	I_{GND}	1440	mA
Power Dissipation	P_D	2.87 (DIP-24 : Ta=25°C)	W
		1.45 (SOP-24 : Ta=25°C)	
		1.27 (SSOP-24 : Ta=25°C)	
Thermal Resistance	$R_{th(j-a)}$	40.0 (DIP-24)	°C/W
		79.2 (SOP-24)	
		90.2 (SSOP-24)	
Storage Temperature	T_{stg}	-55 ~ 150	°C

Recommended Operating Condition

CHARACTERISTIC	SYMBOL	CONDITION	MIN.	TYP.	MAX.	UNIT
Supply Voltage	V_{DD}	—	4.5	5.0	5.5	V
Output Voltage	V_{OUT}	—	—	—	9	V
Operating temperature	T_{OPR}	—	-40	—	85	℃
Output Current	I_O	OUTn	5	—	85	mA
	I_{OH}	SERIAL-OUT	—	—	1.0	
	I_{OL}	SERIAL-OUT	—	—	-1.0	
Input Voltage	V_{IH}	—	0.7VDD	—	VDD+0.3	V
	V_{IL}	—	-0.3	—	0.3VDD	
LATCH Pulse Width	$t_{w\ LAT}$	V_{DD} = 4.5 ~ 5.5 V	15	—	—	ns
CLOCK Pulse Width	$t_{w\ CLK}$		15	—	—	ns
Set-up Time for DATA	$t_{setup(D)}$		20	—	—	ns
Hold Time for DATA	$t_{hold(D)}$		20	—	—	ns
Set-up Time for LATCH	$t_{setup(L)}$		15	—	—	ns
Clock Frequency	f_{CLK}	Cascade operation	—	—	25	MHz
Power Dissipation	P_D	Ta = 85°C (DIP-24)	—	—	1.37	W
		Ta = 85°C (SOP-24)			0.69	
		Ta = 85°C (SSOP-24)	—	—	0.61	

Electrical Characteristics (VDD = 5.0 V, Ta = 25°C unless otherwise noted)

CHARACTERISTIC	SYMBOL	CONDITION	MIN.	TYP.	MAX.	UNIT
Input Voltage "H" Level	VIH	—	0.7VDD	—	VDD	V
Input Voltage "L" Level	VIL	—	GND	—	0.3VDD	
Output Leakage Current	IOH	VOH = 9.5 V	—	—	1.0	uA
Output Voltage (S - OUT)	VOL	IOL = 1.0 mA	—	—	0.4	V
	VOH	IOH = -1.0 mA	4.6	—	—	
Output Current (Bit-Bit)	IOL1	VOUT = 0.7±0.25V REXT = 910Ω	—	3	6	%
	IOL2	VOUT = 0.7±0.25V REXT = 360Ω	—	3	6	
Output Current (Chip-Chip)	IOL3	VOUT = 0.7V REXT = 910Ω	—	5	10	
	IOL4	VOUT = 0.7V REXT = 360Ω	—	5	10	
Supply Voltage Regulation	% / VDD	REXT = 470Ω, Ta = -40 ~ 85°C	—	1.5	5.0	% / V
Pull-Up Resistor	RIN(up)	—	150	300	600	KΩ
Pull-Down Resistor	RIN(down)	—	100	200	400	KΩ
Supply Current "OFF"	IDD(off)1	REXT = OPEN, OUT0~7 = off	—	0.3	0.6	mA
	IDD(0ff)2	REXT = 470Ω, OUT0~7 = off	3.9	5.5	7.7	
	IDD(off)3	REXT = 250Ω, OUT0~7 = off	7.2	10.1	14.1	
Supply Current "ON"	IDD(on)1	REXT = 470Ω, OUT0~7 = on	3.9	5.5	7.7	
	IDD(on)2	REXT = 250Ω, OUT0~7 = on	7.2	10.1	14.1	

Switching Characteristics (Ta = 25 °C unless otherwise noted)

CHARACTERISTIC		SYMBOL	CONDITION	MIN.	TYP.	MAX.	UNIT
Propagation Delay Time ("L" to "H")	SIN-OUTn	t_{pLH}	VDD=5.0V VIH=VDD VIL=GND REXT=470Ω[1] VL=3.0V RL=65Ω CL=13pF	—	450	550	ns
	LATCH-OUTn			—	450	550	
	ENABLE-OUTn			—	450	550	
	CLK-SOUT			—	15	20	
Propagation Delay Time ("H" to "L")	SIN-OUTn	t_{pHL}		—	20	40	ns
	LATCH-OUTn			—	20	40	
	ENABLE-OUTn			—	20	40	
	CLK-SOUT			—	15	20	
Output Current Rise Time		t_{or}		—	450	550	ns
Output Current Fall Time		t_{of}		—	20	40	ns

[1] Delay time t_{pLH} and Rise Time tor will both increase as the Rext value increased.

Test Circuit

DC characteristic

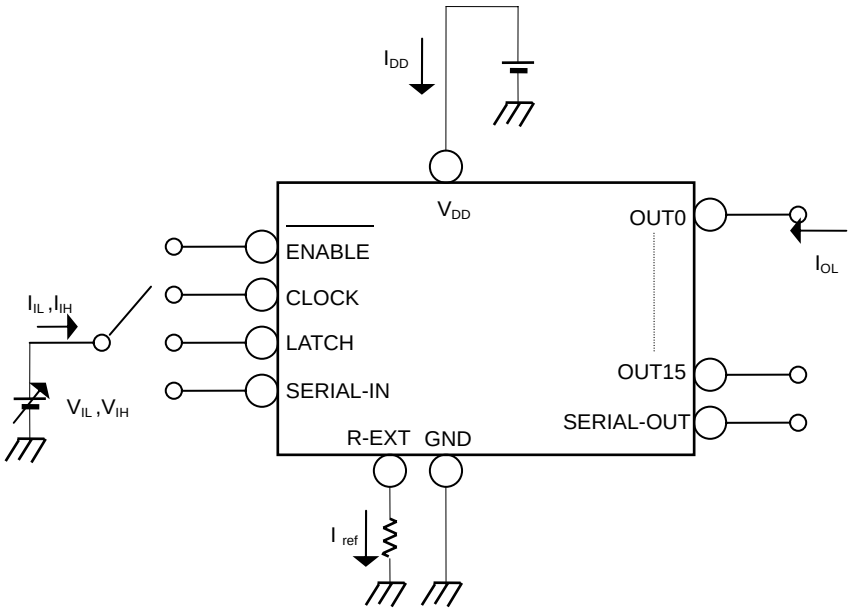

AC characteristic

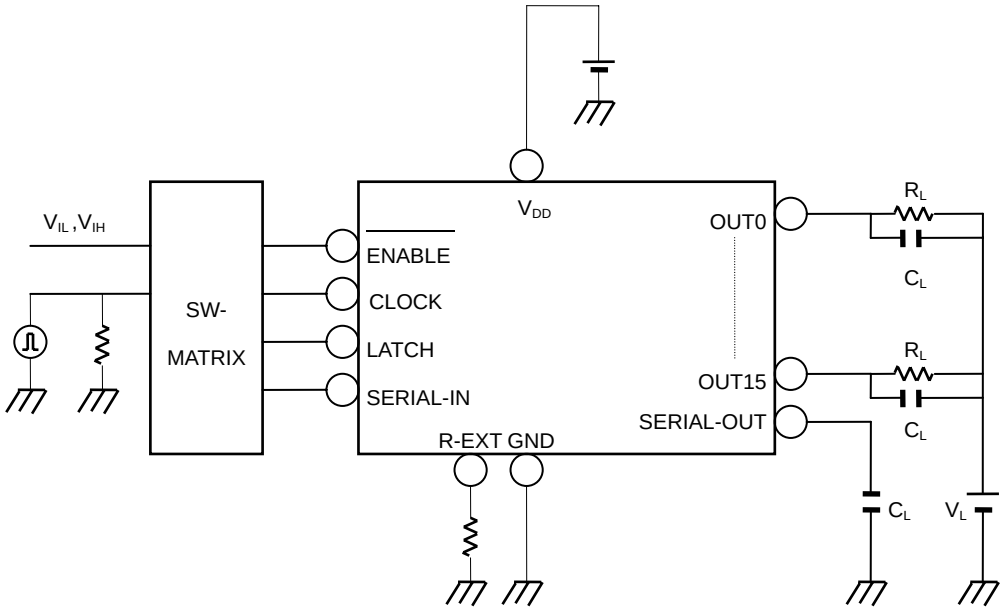

Timing Diagram

1. CLOCK-SERIAL-IN, SERIAL-OUT, OUTn

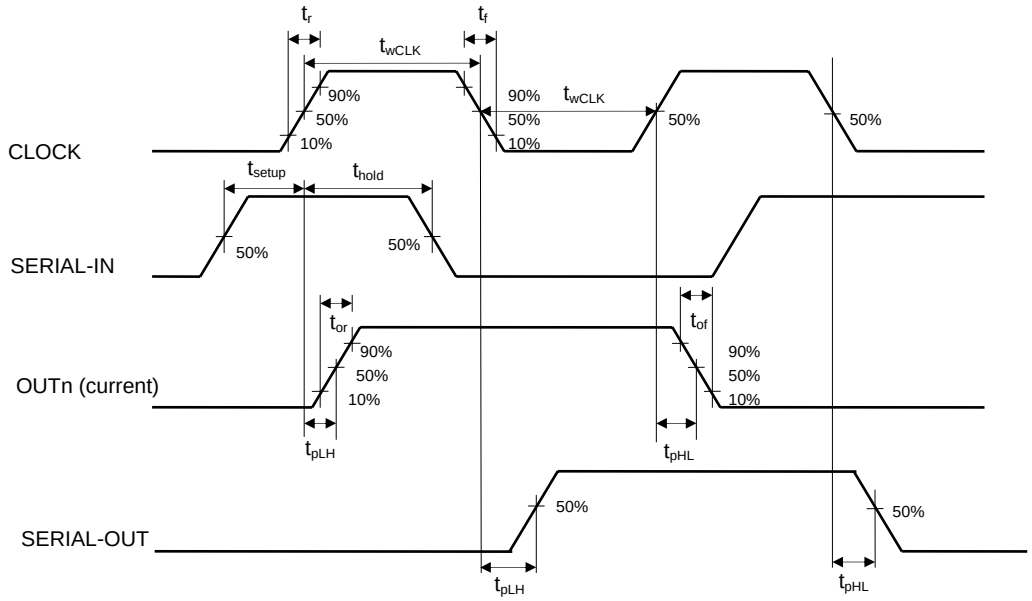

2. CLOCK-LATCH

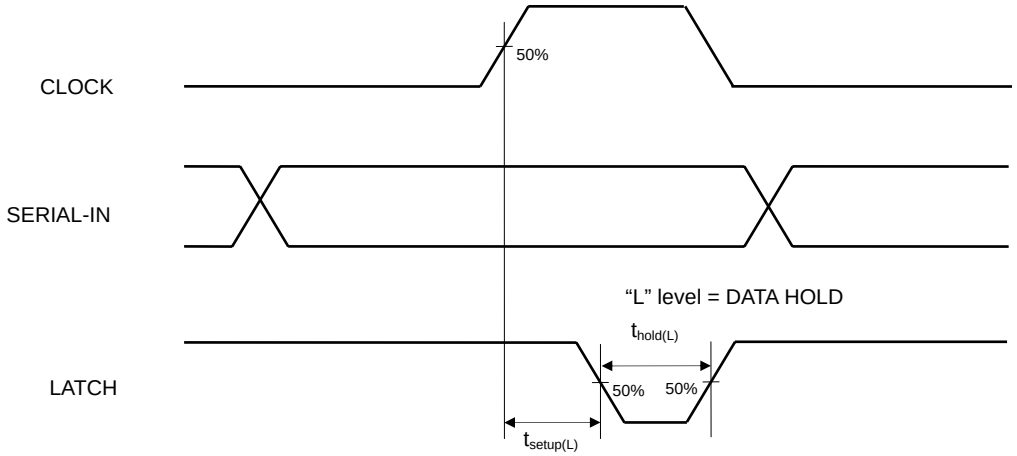

3. $\overline{\text{ENABLE}}$-OUTn

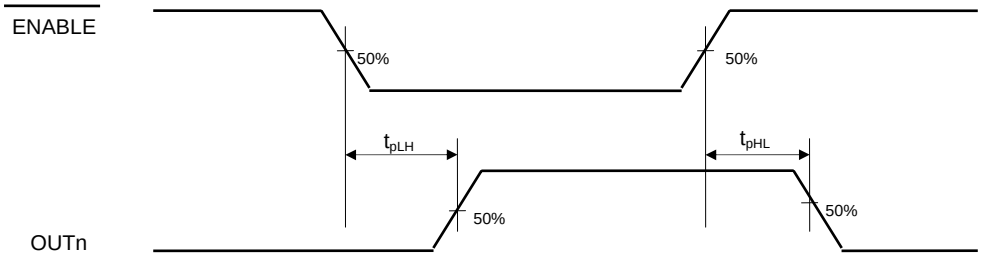

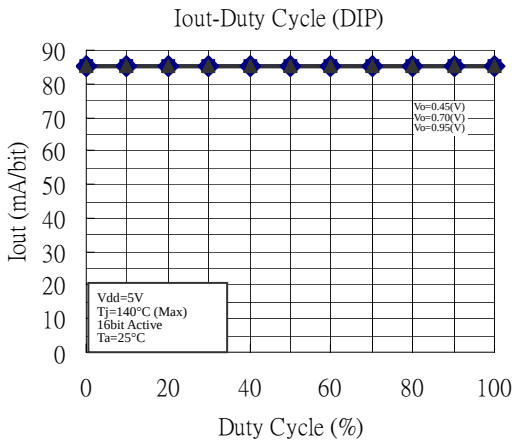
Iout-Duty Cycle (DIP)
Iout (mA/bit)
Duty Cycle (%)
Vo=0.45(V)
Vo=0.70(V)
Vo=0.95(V)
Vdd=5V
Tj=140°C (Max)
16bit Active
Ta=25°C

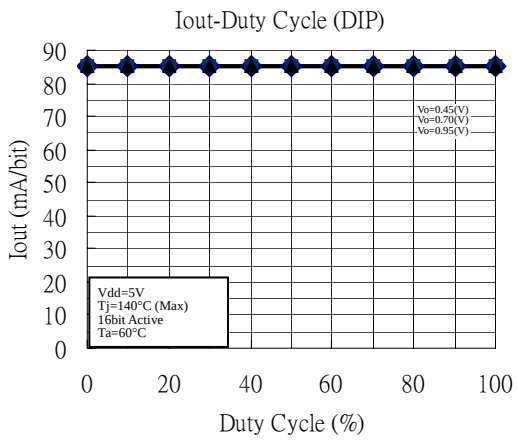
Iout-Duty Cycle (DIP)
Iout (mA/bit)
Duty Cycle (%)
Vo=0.45(V)
Vo=0.70(V)
Vo=0.95(V)
Vdd=5V
Tj=140°C (Max)
16bit Active
Ta=60°C

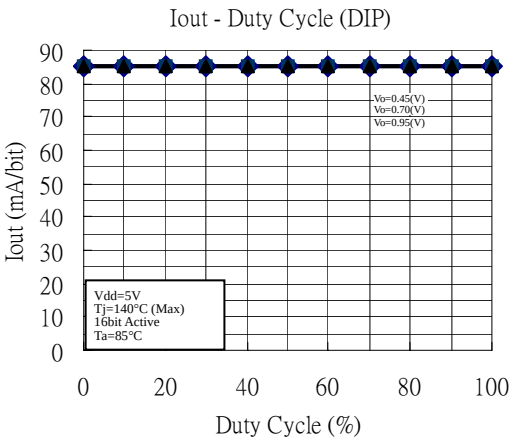
Iout - Duty Cycle (DIP)
Iout (mA/bit)
Duty Cycle (%)
Vo=0.45(V)
Vo=0.70(V)
Vo=0.95(V)
Vdd=5V
Tj=140°C (Max)
16bit Active
Ta=85°C

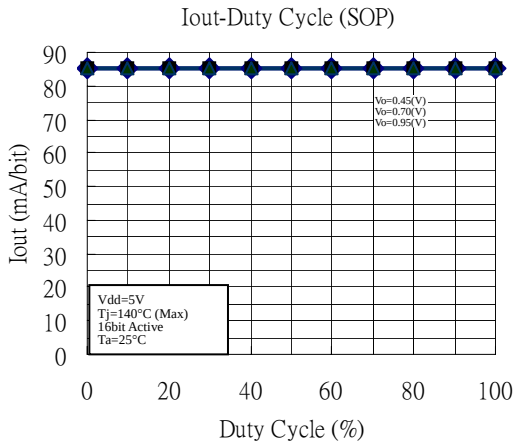
Iout-Duty Cycle (SOP)
Iout (mA/bit)
Duty Cycle (%)
Vo=0.45(V)
Vo=0.70(V)
Vo=0.95(V)
Vdd=5V
Tj=140°C (Max)
16bit Active
Ta=25°C

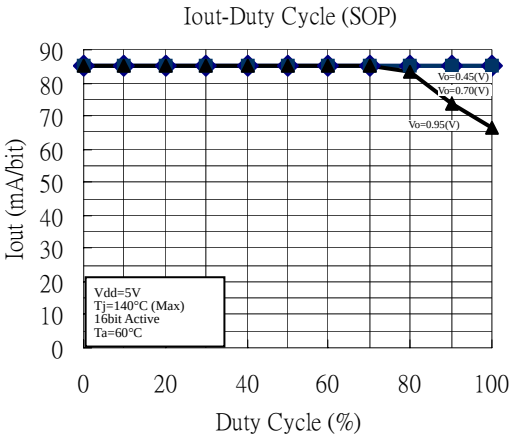
Iout-Duty Cycle (SOP)
Iout (mA/bit)
Duty Cycle (%)
Vo=0.45(V)
Vo=0.70(V)
Vo=0.95(V)
Vdd=5V
Tj=140°C (Max)
16bit Active
Ta=60°C

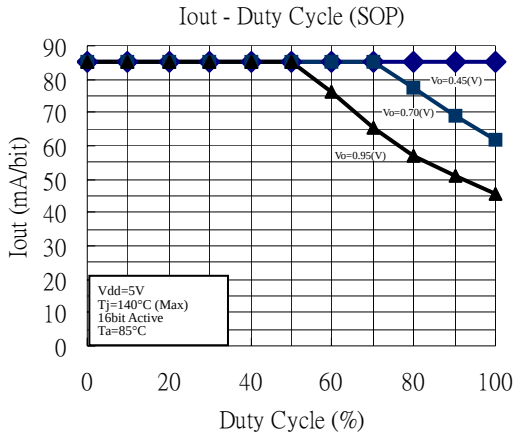
Iout - Duty Cycle (SOP)
Iout (mA/bit)
Duty Cycle (%)
Vo=0.45(V)
Vo=0.70(V)
Vo=0.95(V)
Vdd=5V
Tj=140°C (Max)
16bit Active
Ta=85°C

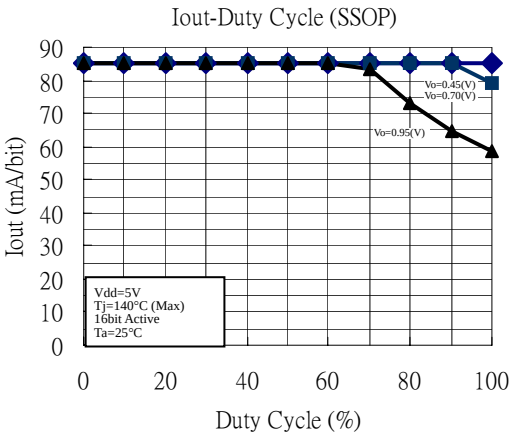
Iout-Duty Cycle (SSOP)
Iout (mA/bit)
Duty Cycle (%)
Vo=0.45(V)
Vo=0.70(V)
Vo=0.95(V)
Vdd=5V
Tj=140°C (Max)
16bit Active
Ta=25°C

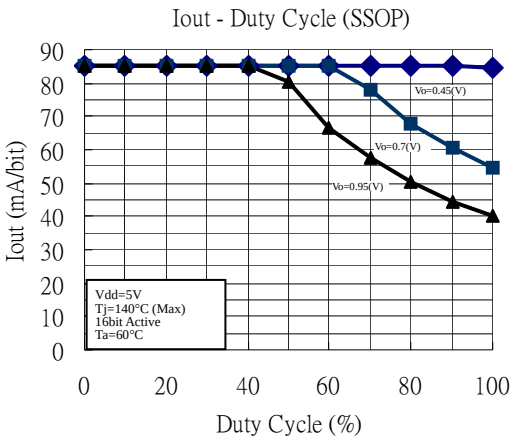
Iout - Duty Cycle (SSOP)
Iout (mA/bit)
Duty Cycle (%)
Vo=0.45(V)
Vo=0.7(V)
Vo=0.95(V)
Vdd=5V
Tj=140°C (Max)
16bit Active
Ta=60°C

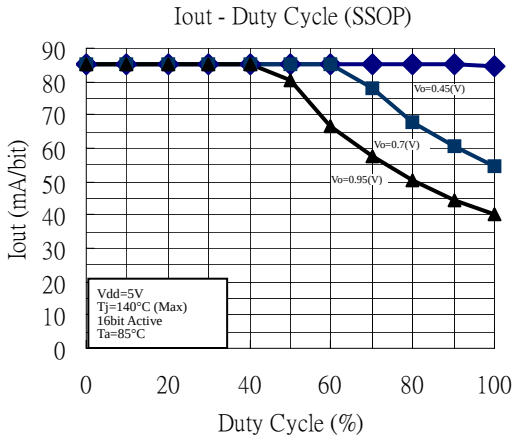
Iout - Duty Cycle (SSOP)
Iout (mA/bit)
Duty Cycle (%)
Vo=0.45(V)
Vo=0.7(V)
Vo=0.95(V)
Vdd=5V
Tj=140°C (Max)
16bit Active
Ta=85°C

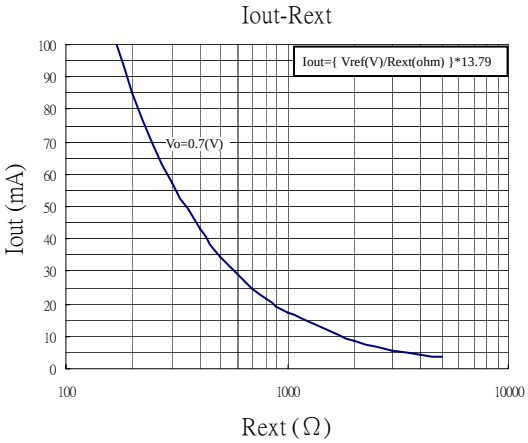
Iout-Rext
Iout={ Vref(V)/Rext(ohm) }*13.79
Vo=0.7(V)
Iout (mA)
Rext (Ω)

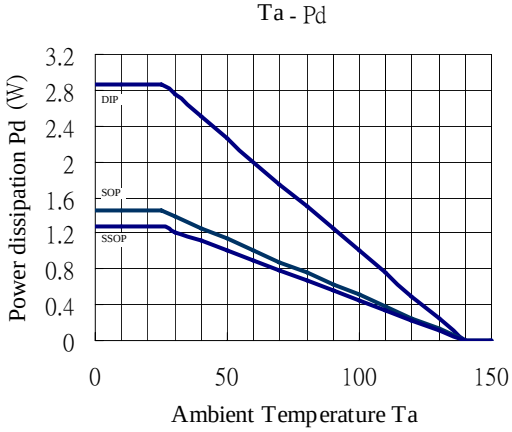

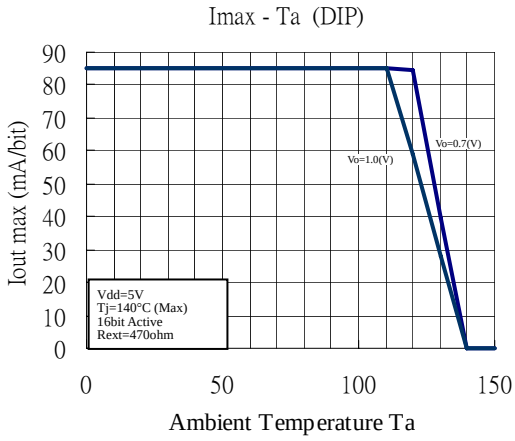

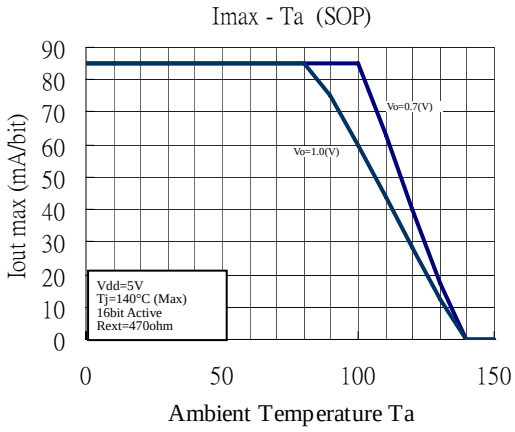

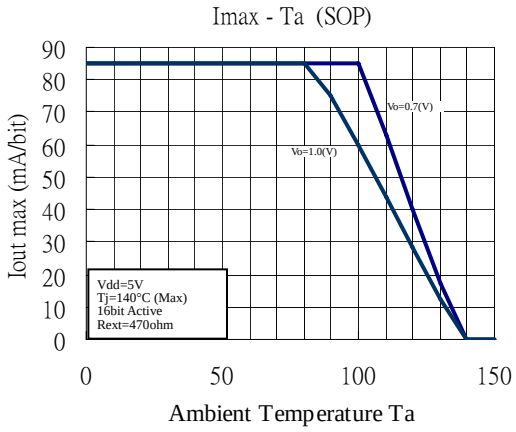

Note

As the power dissipation of a semiconductor chip is limited its package and ambient temperature, this device requires a maximum output current be calculated for a given operating condition. The maximum allowable power consumption (Pd (max)) of this device is calculated as follows:

$$Pd(\max)(Watt) = \frac{(\text{Tj (junction temperature) (max) - Ta (ambient temperature) })(°C)}{\text{Rth } (°C/Watt)}$$

Based on the Pd (max), the maximum allowable current can be calculated as follows:

$$\text{Iout} = (\text{ Pd} - V_{DD} \cdot I_{DD}) / (\text{ \# outputs} \cdot \text{Vo} \cdot \text{Duty })$$

System Configuration Example

[1] Output current (I_{OUT})

Sink current is set by the external resistor as shown in the figure (Iout vs. Rext).

[2] LED supply voltage (V_{LED}) setup

$$V_{LED} = V_{CE}\ (T_r\ V_{sat}) + V_f\ (\text{LED forward voltage}) + V_O\ (\text{IC supply voltage})$$

To prevent too much power dissipated by the device due to higher V_{LED} , an additional R can be used to reduce the Vout when the outputs consume current:

$$R = \frac{V_{LED} - V_{CE} - V_f - V_O(\min)}{I_O(\max) * Bit(\max)}$$

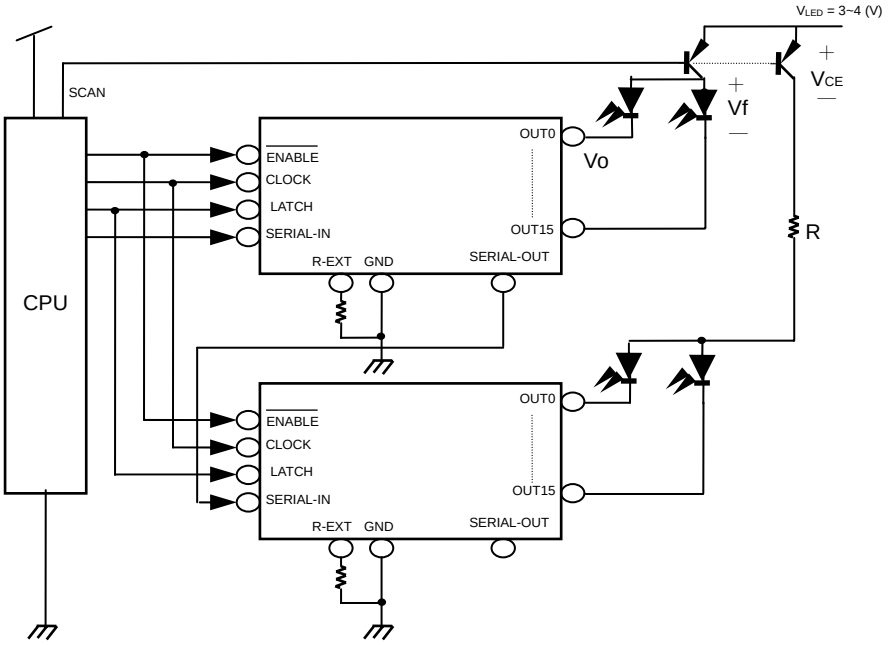

Note

This device has only one ground pin shared by signal, output sink current, and power ground. It is advisable to pattern the ground layout with minimized inductance such that the switching noise induced by the input signals and the output sink current would not cause chip malfunction. To prevent the drivers' outputs from damage by overshoot stress, it is also advisable not to turn off the drivers and scan transistors simultaneously.

Package Outline

P-DIP 24

UNIT：INCH

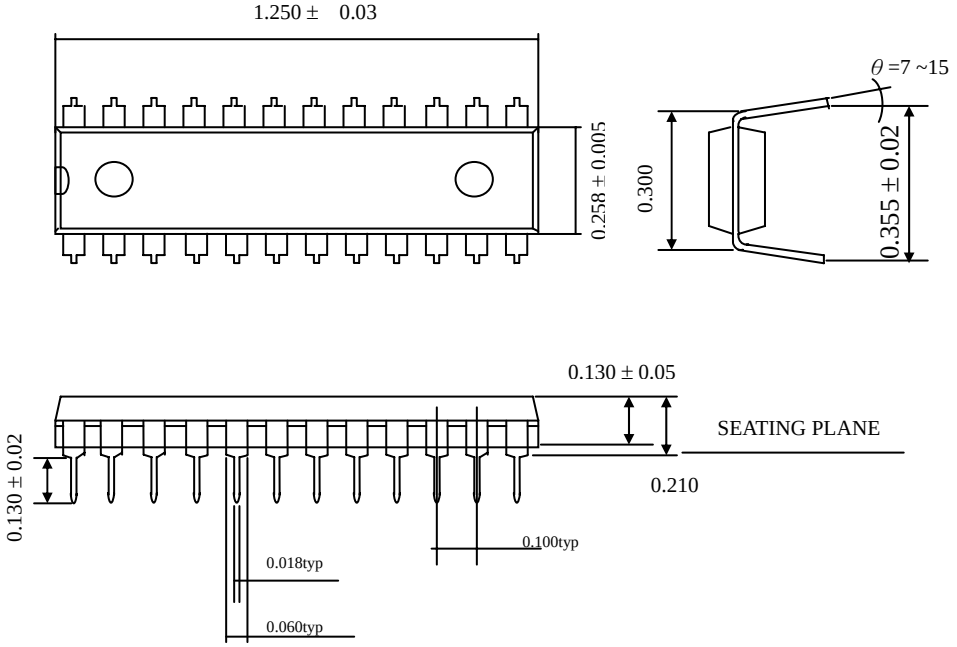

Package Outline

SOP24

UNIT：INCH

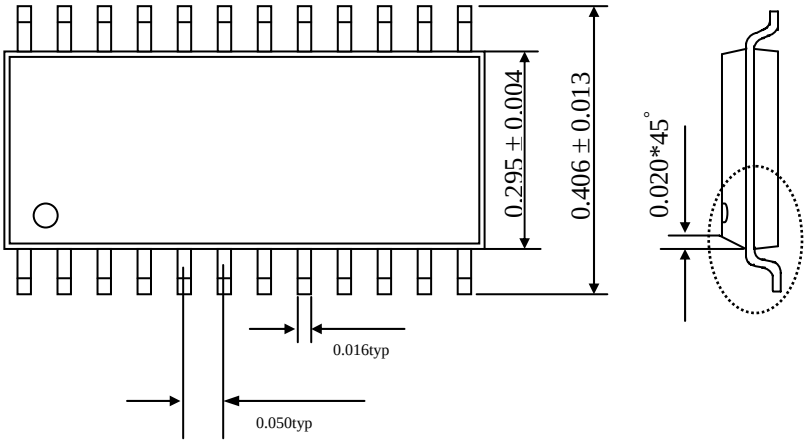

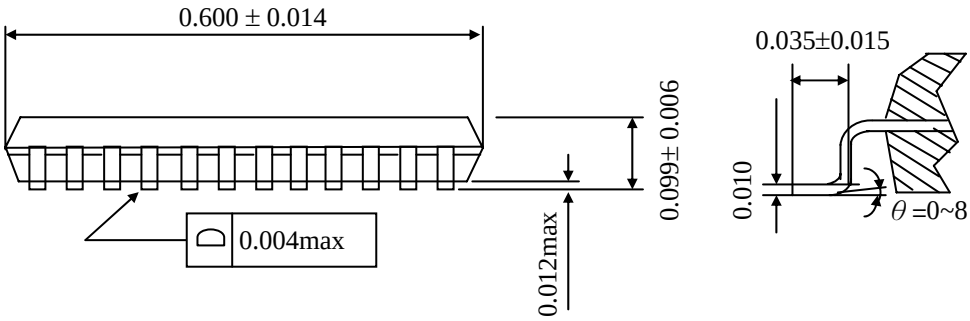

Package Outline

SSOP24

UNIT：INCH

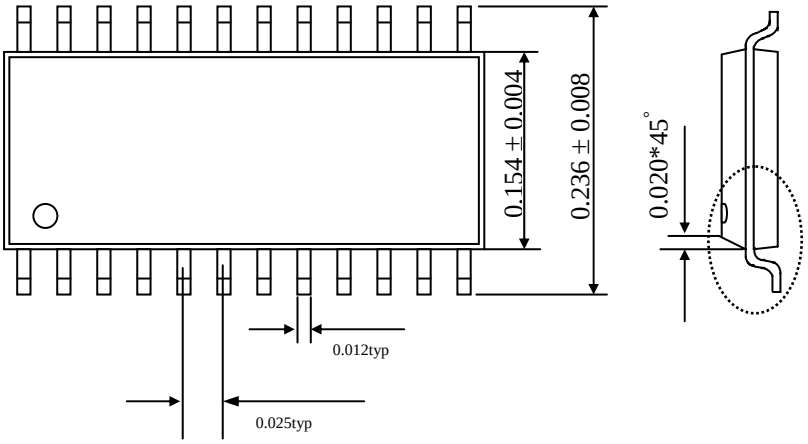

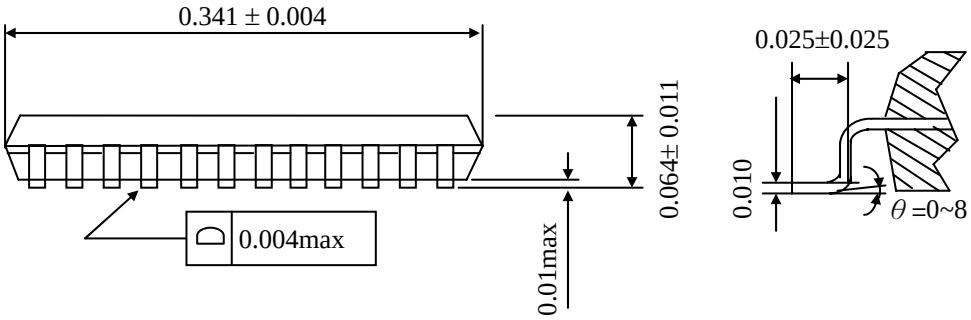

The products listed herein are designed for ordinary electronic applications, such as electrical appliances, audio-visual equipment, communications devices and so on. Hence, it is advisable that the devices should not be used in medical instruments, surgical implants, aerospace machinery, nuclear power control systems, disaster/crime-prevention equipment and the like. Misusing those products may directly or indirectly endanger human life, or cause injury and property loss.
Silicon Touch Technology, Inc. will not take any responsibilities regarding the misusage of the products mentioned above. Anyone who purchases any products described herein with the above-mentioned intention or with such misused applications should accept full responsibility and indemnify. Silicon Touch Technology, Inc. and its distributors and all their officers and employees shall defend jointly and severally against any and all claims and litigation and all damages, cost and expenses associated with such intention and manipulation.