D1RFRD006

REVISION RECORD				
REV	ECO	DESCRIPTION	DRFT	DATE
1		增加UL, VDE, CE刻字	Zengy	09/09/08'

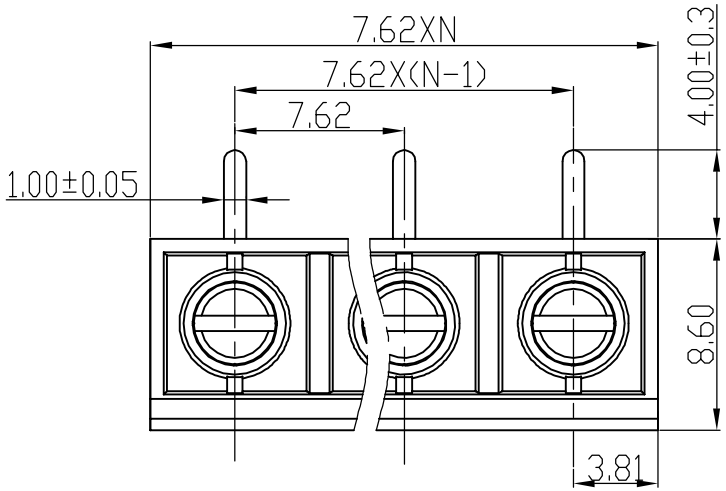

Notes:

1. Pitch:7.62mm ,Poles:2-12P
2. Rated voltage/current:UL 300V/15A
   VDE 450V/22A
3. Operation temperatures:-40℃～+105℃
4. Withstanding Voltage:AC2000V/1Min
5. Insulation Resistance:5000MΩ/DC1000V
6. Wire Range:22～12AWG,0.5～2.5mm²
7. Max.Torque Value:M2.5,4.08kgf.cm
8. Undimensioned Tolerances:

Pitch range in mm			Naminal dimension range in mm					—
to 6	over 6 to 10	over 10 to 24	to 30	over 30 to 60	over 60 to 100	over 100 to 150	over 150	⌒ ▱
±0.10	±0.15	±0.25	±0.2	±0.3	±0.5	±0.7	±1.0	0.05/10

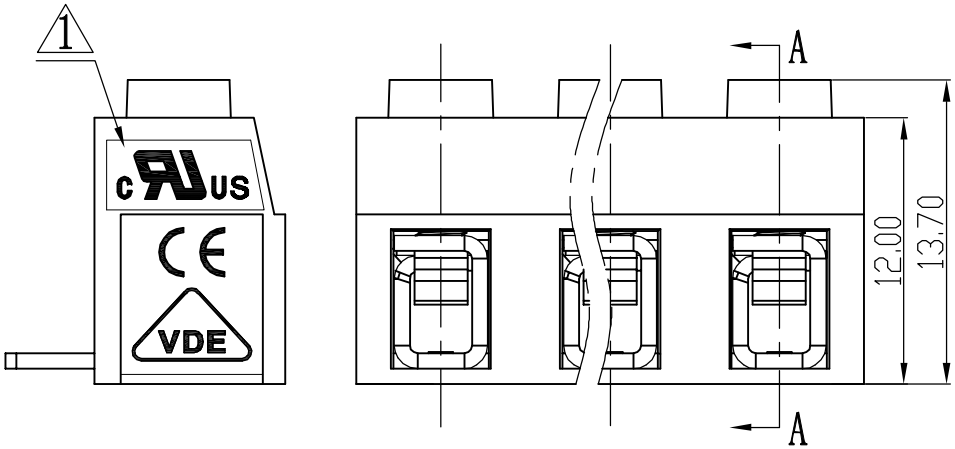

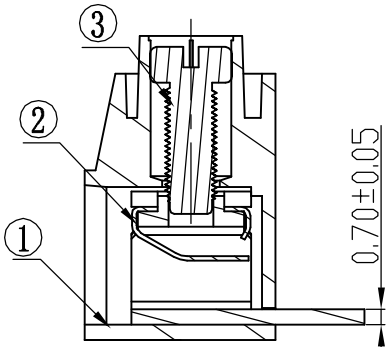

SECTION A-A

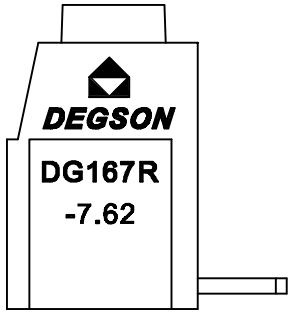

ITEM	NAME OF PART	NO. OF PART	Q'TY	MATERIAL	NOTES
1	DG167R-7.62 Housing	4089A0YXXA(H)	1	PA66	UL94V-0
3	DG167 Screws	S000001530(H)	XX	Steel	Cr^{3+}Zn
2	DG167R Pin header	4023B00010(H)	XX	Brass	SnCe

DETACHED LISTS

MM (INCH)

TOLERANCES EXCEPT AS NOTED

MM	
.0 ±	±
.00 ±	±
.000 ±	±

ANGLES ± 1°

THIRD ANGLE PROJECTION

DFTD LIN	DATE 04/08/07'	
CHKD	DATE	
MFD	DATE	
APPVL	DATE	
MATERIAL :		
G.E :		
FINISH:		
SCALE : 1:1		

DEGSON ® 宁波高正电子有限公司 DEGSON ELECTRONICS CO., LTD

NAME DG167R-7.62-XXP-1Y-00A(H)

DRAWING NO. DG167R-7.62-E01 /PART NO.

SIZE A3 REV T1 09/09/08'

DO NOT SCALE DRAWING

SHEET 1 OF 1