Thyristor Surge Protector

WEOS4-80/270AS

Document: W0101112
Version: C

Features

- Bi-directional crowbar transient voltage protection
- High surge capability
- High off-state impedance, Low leakage current
- Low on-state voltage
- Short-circuit failure mode

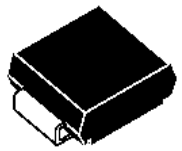

SMB
(JEDEC DO-214AA)

Main Application

WAYON's thyristor surge protector devices are designed to help protect sensitive telecommunication equipment from the hazards caused by lightning, power contact, and power induction. These devices enable equipment to comply with various regulatory requirements including GR 1089, ITU K.20, K.21 and K.45, IEC 60950, UL 60950, and TIA-968-A (formerly known as FCC Part 68).

Typical application including:

- Central office switching equipment, Analog and digital linecards (xDSL, T1/E1, ISDN...).
- Customer Premises Equipment (CPE) such as phones, fax machines, modems, POS terminals, PBX systems and caller ID adjunct boxes.
- Primary protection modules including Main Distribution Frames (MDF), building entrance equipment and station protection modules.
- Access network equipment such as remote terminals, line repeaters, multiplexers, cross-connects, WAN equipment, Network Interface Devices (NID).
- Data lines and security systems.
- CATV line amplifiers and power inserters.
- Sprinkler systems.

Electrical Parameters (T_{amb}=25°C)

Part Number	V_{DRM}	I_{DRM}	V_{BO}	I_{BO}	V_T	I_T	C_O	I_H	I_{PP}
	Max.	Max.	Max.	Max.	Max.	Max.	Typ.	Min.	10/1000μs
	V	μA	V	mA	V	A	pF	mA	A
WEOS4-80/270AS	270	5	350	800	4	2.2	30	120	80

V_{DRM}: Stand-off voltage, is measured at I_{DRM}.
I_{DRM}: Leakage current at V_{DRM}.
V_{BO}: Breakover voltage, is measured at 100V/μs.
I_{BO}: Breakover current.
V_T: On-state voltage.
I_T: On-state current.
C_O: Off-state capacitance.
I_H: Holding current.
I_{PP}: Peak pulse current, is a repetitive surge rating and is guaranteed for the life of the product.

General Notes:

- All measurements are made at an ambient temperature of 25 °C. I_{PP} applies to -40 °C through +85 °C temperature range.
- Listed WEOS4 devices are bi-directional. All electrical parameters and surge ratings apply to forward and reverse polarities.
- Special voltage (V_{BO} and V_{DRM}) and holding current (I_H) requirements are available up on request.
- Off-state capacitance is measured at 1 MHz with a 2 V bias.

Product Dimensions

Ref.（mm）	Min.	Max.
A1	1.90	2.45
A2	0.05	0.20
b	1.95	2.20
c	0.15	0.41
E	5.10	5.60
E1	4.05	4.60
D	3.30	3.95
L	0.75	1.60

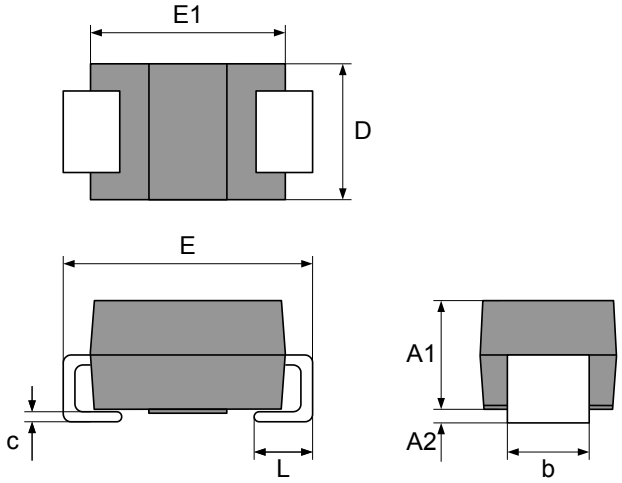

Electrical Characteristics Curves

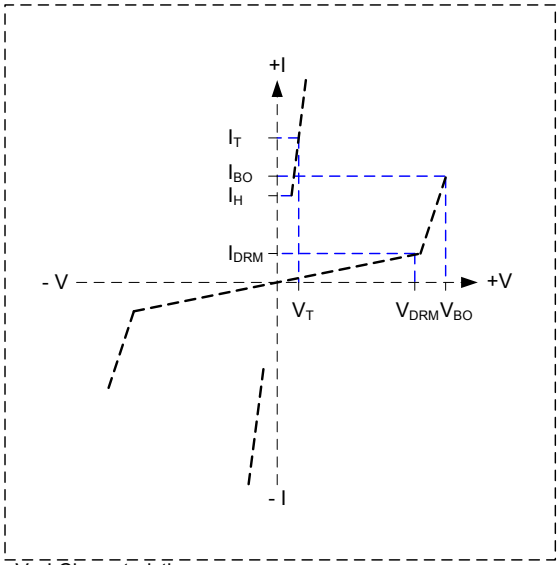

V - I Characteristics

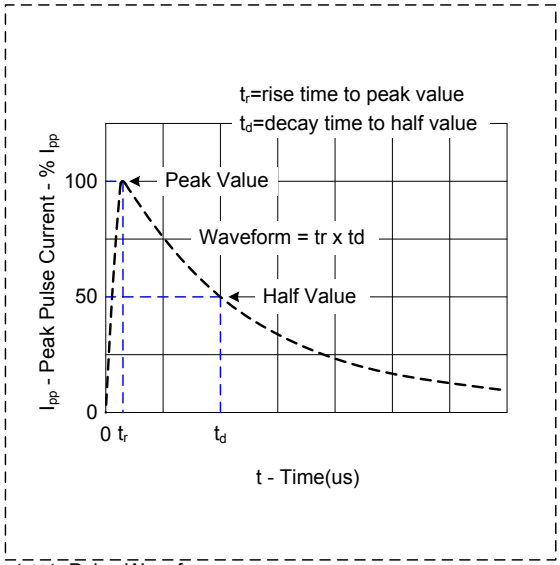

t_r X t_d Pulse Waveform

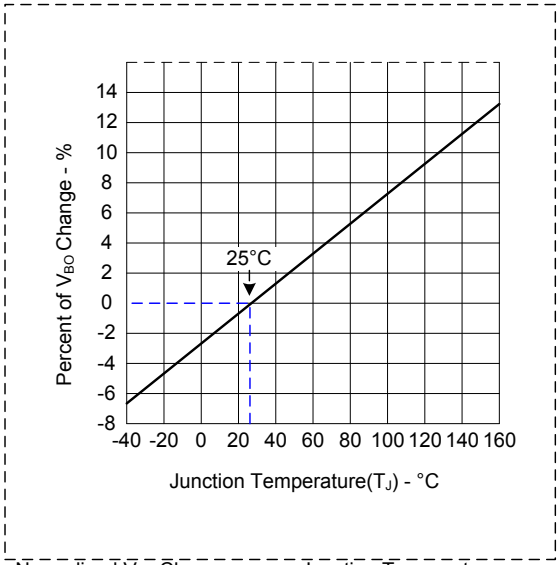

Normalized V_{BO} Change versus Junction Temperature

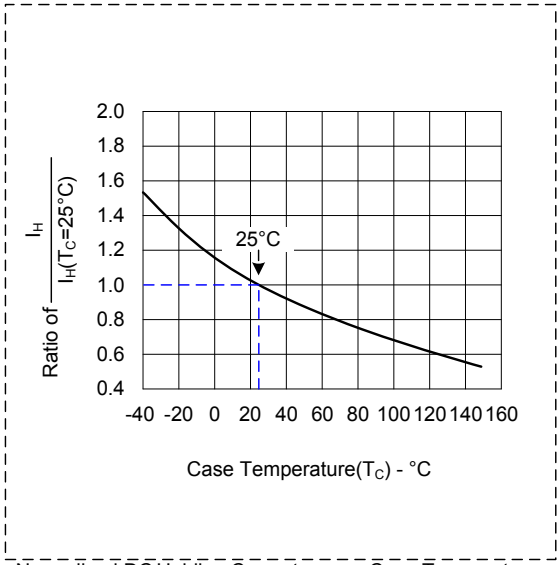

Normalized DC Holding Current versus Case Temperature

Thermal Resistances

Symbol	Parameter	Value	Unit
Ts	Storage temperature range	-55 to +150	℃
Tj	Maximum junction temperature	150	℃

Solder Reflow Recommendations

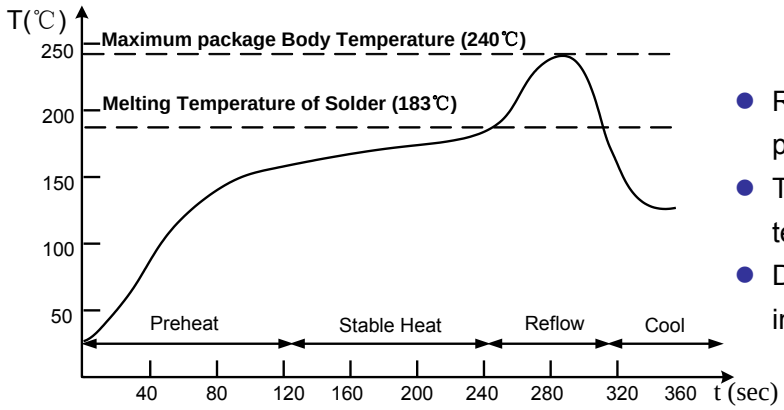

- Recommended reflow methods: IR, vapor phase oven, hot air oven, wave solder.
- The device can be exposed to a maximum temperature of 265°C for 10 seconds.
- Devices can be cleaned using standard industry methods and solvents.

Notes: If reflow temperatures exceed the recommended profile, devices may not meet the performance requirements.

Agency Recognition

UL c US **SGS** RoHS

Part Numbering System

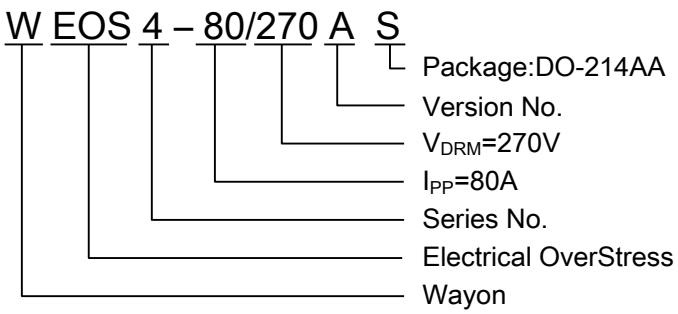

Marking:

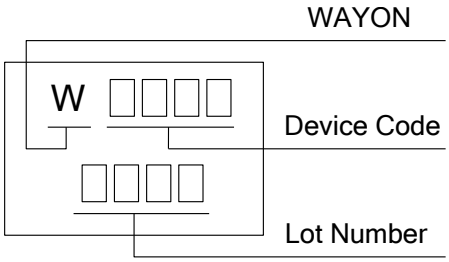

Package Information

Tape & Reel: 2500pcs per reel.

Effectivity: Reference documents shall be the issue in effect on the date of invitation for bid.

Caution: Operation beyond the rated voltage or current may result in rupture electrical arcing or flame.