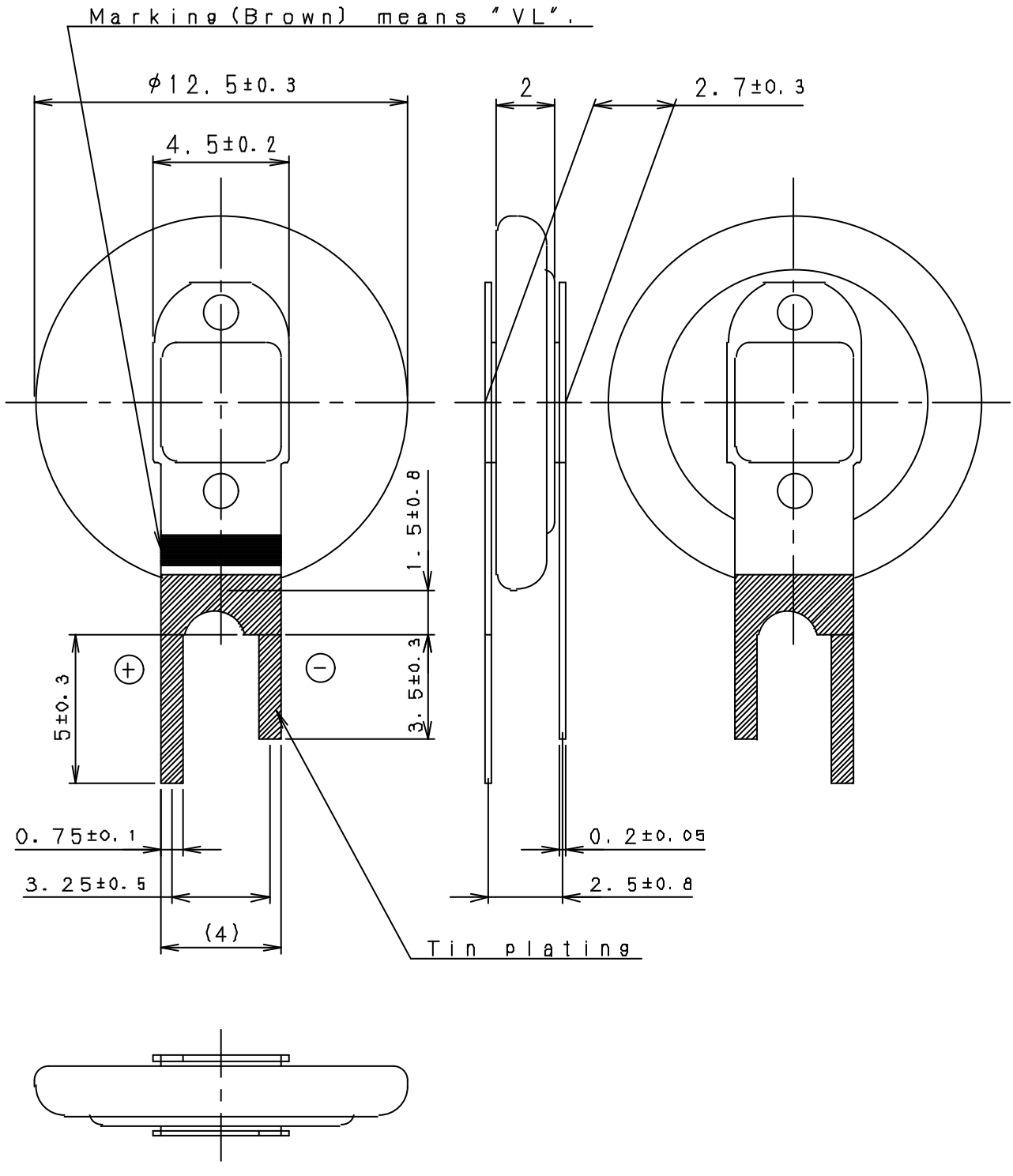

Unit:mm

Scale	5/1	Drawn	. .	Designed		Checked		Approved		Name	VL1220/1VB
										No.	PS-V12250 (1)

Matsushita Battery Industrial Co., Ltd. Lithium and Micro Battery Business Unit