Symbol	Date	Revision	Signed	Checked
△				

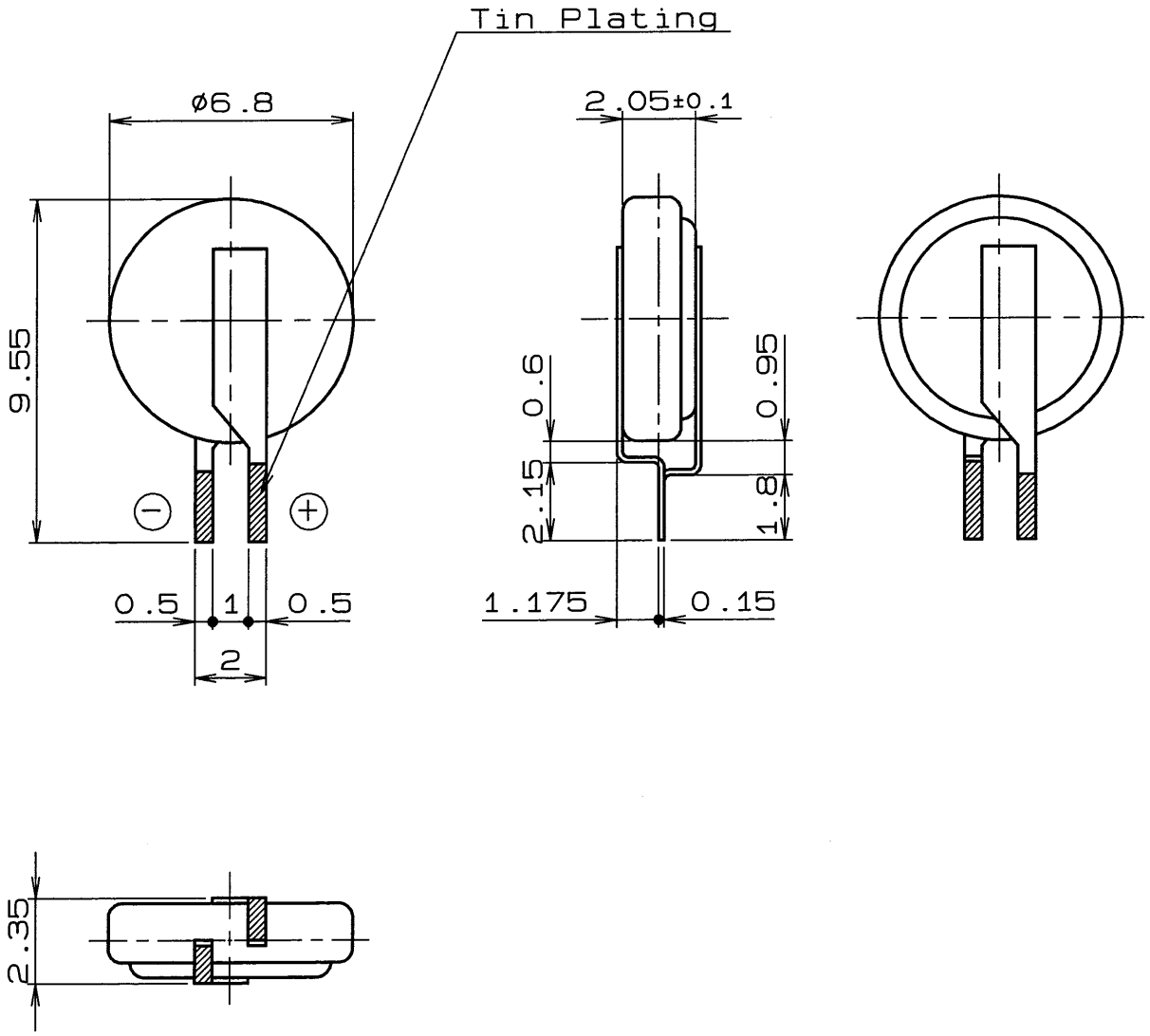

UNLESS OTHERWISE SPECIFIED DIMENSIONS ARE IN TOLERANCES
ON "Lithium & Micro Battery Dimension Standard"

Unit: mm

Lithium & Micro Battery Dimension Standard (for Products)	Nominal Size	Tolerance	Product No.	VL-621/F9AE
	≦6	±0.2		
	6<~≦30	±0.5		
	30<~≦120	±0.8	Name	Product Drawing
	Angle	±5°		

Scale	Designed	Drawn	Checked	Checked	Approved	Drawing No.	PS-V06391-a
5: 1							

Matsushita Battery Industrial Co.,Ltd. Lithium and Micro Battery Business Unit A4