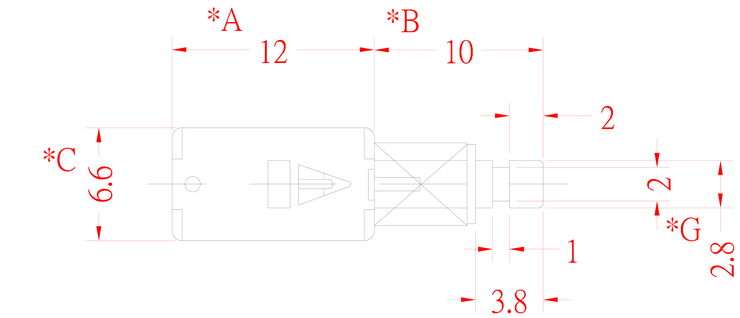

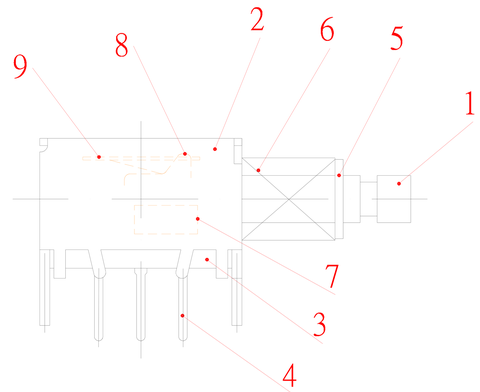

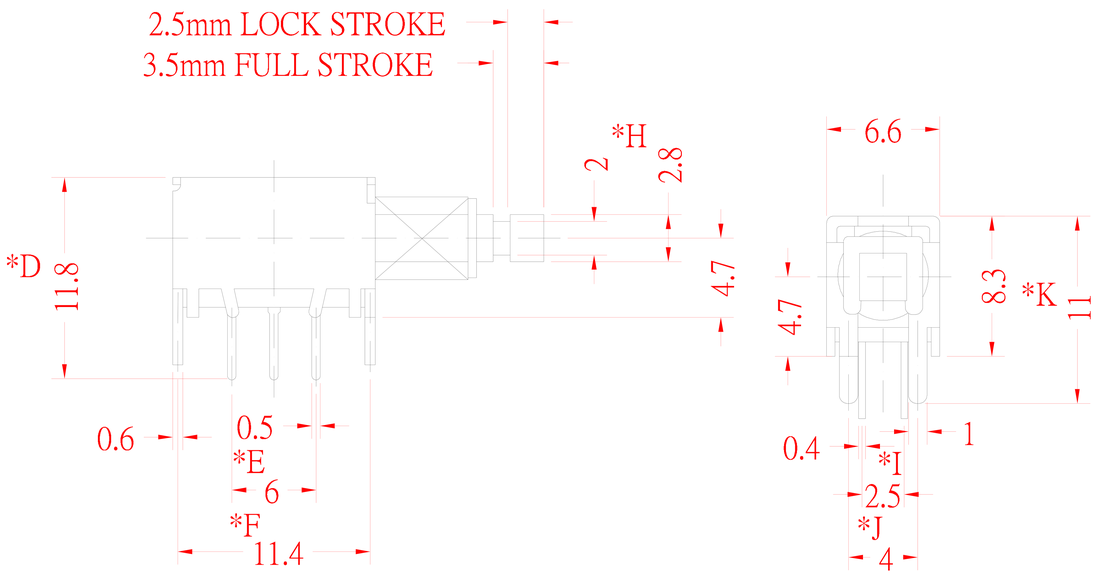

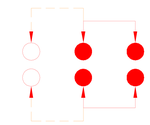

SCHEMATIC

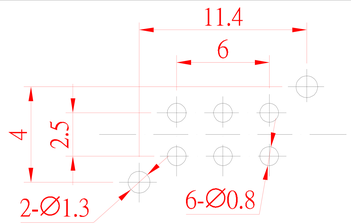

P.C.B.LAYOUT

* CRITICAL DIMENSION

CHI FUNG ELECTRONICS CO.,LTD.

SERIES : PUSH SWITCH
PART NAME: PS-22E05L
UNIT : MM | DWN.
SCALE : 2:1 | CHK'D
REV : A/0 | APPD.

DRAWING NO.: CF-ENL- PS4033

GENERAL TOLERANCE

WITHIN 0.XXmm?.15mm
OVER 0.Xmm?.25mm

NO.	PART NAME	MATERIAL	QTY	FINISHING
9	SPRING PLATE	PBS	1	NATURAL
8	CAM STICK	COPPER	1	NATURAL
7	CONTACT	C5210R-EH	2	Ag CLAD
6	SPRING	STEEL WIRE	1	NATURAL
5	LOCK PLATE	PBS	1	NATURAL
4	TERMINAL	BRASS	6	Ag COATING
3	BASE	PHENOLIC RESIN	1	YELLOW
2	FRAME	SPN	1	Ni COATING
1	KNOB	POM	1	YELLOW

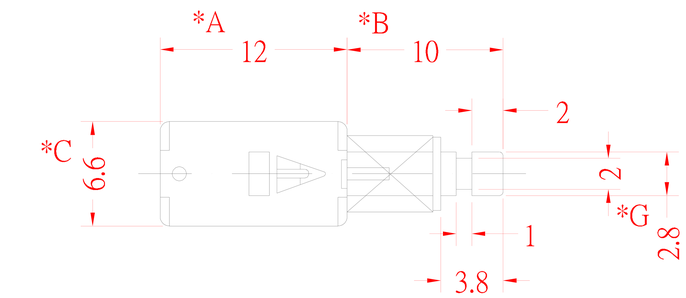

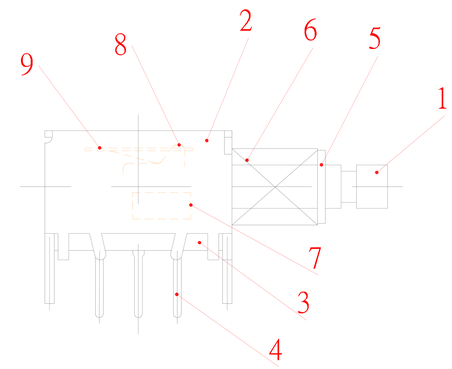

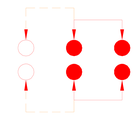

SCHEMATIC

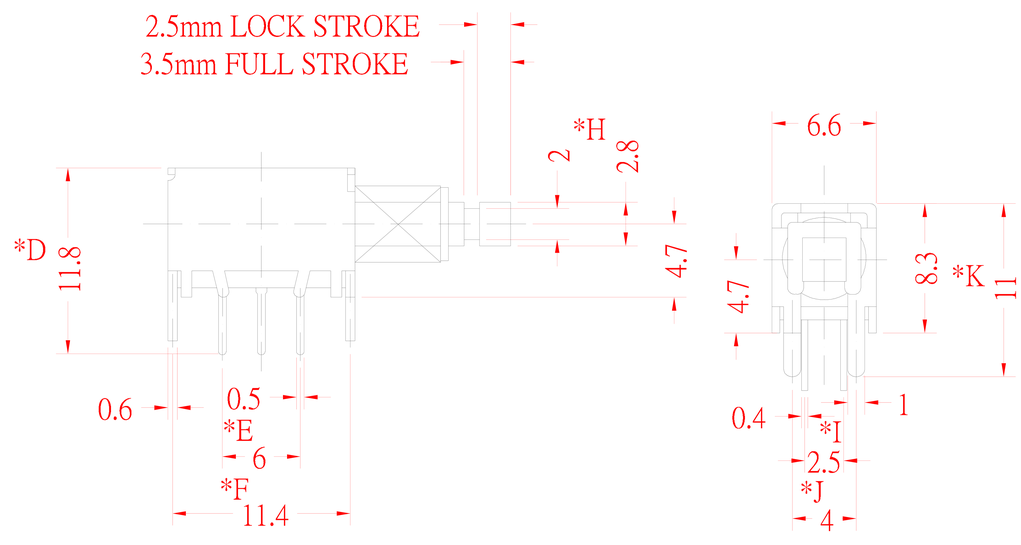

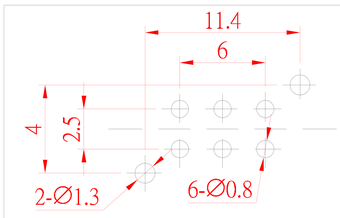

P.C.B.LAYOUT

* CRITICAL DIMENSION

CHI FUNG ELECTRONICS CO.,LTD.

SERIES : PUSH SWITCH
PART NAME: PS-22E05L
UNIT : MM | DWN.
SCALE : 2:1 | CHK'D
REV : A/0 | APPD.

DRAWING NO.: CF-ENL- PS4033

GENERAL TOLERANCE

WITHIN 0.XXmm?.15mm
OVER 0.Xmm?.25mm

NO.	PART NAME	MATERIAL	QTY	FINISHING
9	SPRING PLATE	PBS	1	NATURAL
8	CAM STICK	COPPER	1	NATURAL
7	CONTACT	C5210R-EH	2	Ag CLAD
6	SPRING	STEEL WIRE	1	NATURAL
5	LOCK PLATE	PBS	1	NATURAL
4	TERMINAL	BRASS	6	Ag COATING
3	BASE	PHENOLIC RESIN	1	YELLOW
2	FRAME	SPN	1	Ni COATING
1	KNOB	POM	1	YELLOW