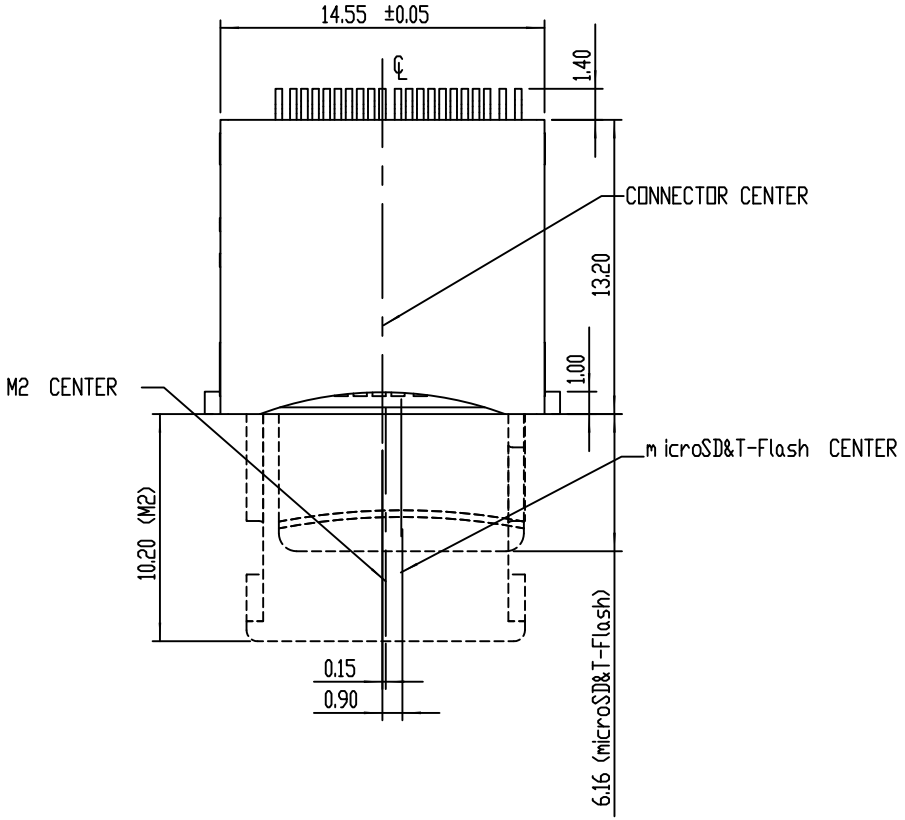

1. MATERIAL:
   INSULATOR: HIGH TEMPRATURE THERMOPLASTIC, UL94V-0,BLACK
   CONTACT: PHOSPHOR BRONZE
2. PLATING:
   CONTACT AREA:3u" and 10u" Au PLATED OVER Ni
   SOLDER AREA:Tin PLATED OVER Ni

1070-T X A X-R
1 2 3 4 5

1.Type
T:Top Mount

2.Contact Plating
A:10u"Gold Plating
B:3u" Gold Plating

3.Stand Off
A:0mm

4.Packing
R:Reel
T:Tray

5.RoHS

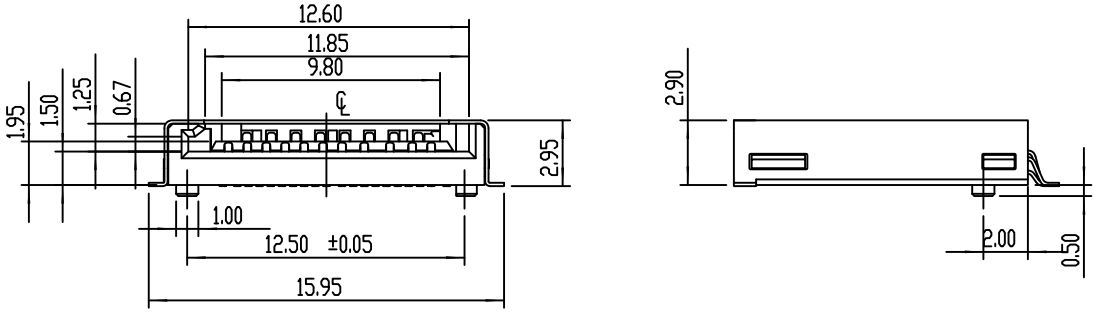

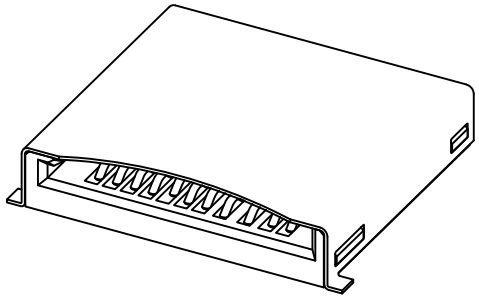

REV.	DESCRIPTION	DATE	REV.	DESCRIPTION	DATE
3	Revise:				
2	Revise:				
1	Revise:				

UNLESS OTHERWISE SPECIFIED TOLERANCE

ANGLES	ANG.	±5°
LINEAR	0.	±0.3
	0.0	±0.25
	0.00	±0.20
SCALE	AS SHOWED	UNIT: mm
DRAWN	Willis	2012/08/03
CHECKED	Angel	2012/08/03
APPROVED	Ken	2012/08/03

SIZE A4 REV. 1.0

ATTEND

DRAWN NAME: Multi Card 2 in 1 Socket Micro SD/M2

PRODUCT NO. 1070-T X A X-R

FILE NAME 1070-TXAX-R_B_1

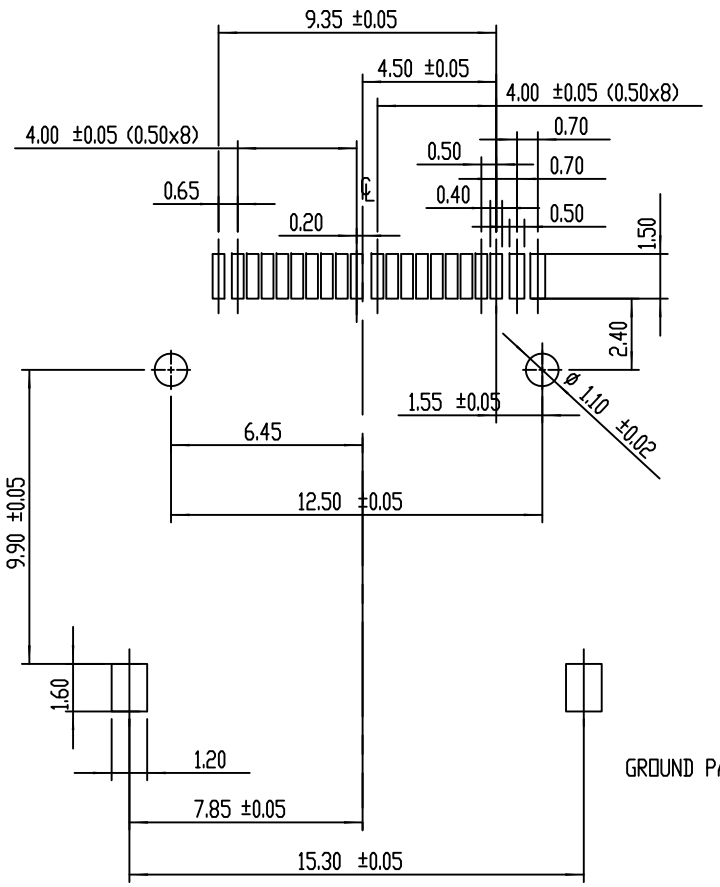

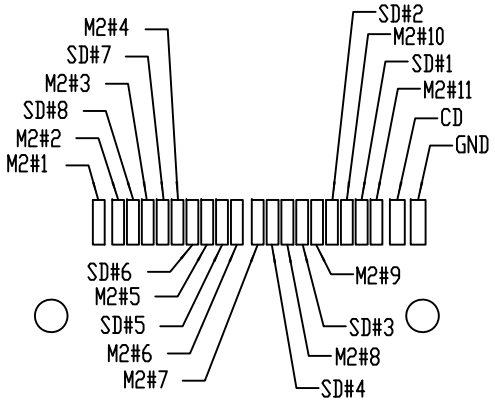

PCB LAYOUT FOR Mobile Phone

Mp3
Camera
Single Slot Card Reader

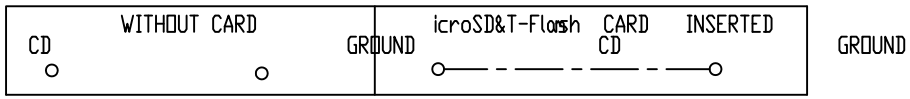

REV.	DESCRIPTION	DATE	REV.	DESCRIPTION	DATE
3	Revise:				
2	Revise:				
1	Revise:				

UNLESS OTHERWISE SPECIFIED TOLERANCE		
ANGLES	ANG.	±5°
LINEAR	0.	±0.3
	0.0	±0.25
	0.00	±0.20
SCALE	AS SHOWED	UNIT: mm
DRAWN	Willis	2012/08/03
CHECKED	Angel	2012/08/03
APPROVED	Ken	2012/08/03
SIZE A4	REV. 1.0	

ATTEND

DRAWN NAME: Multi Card 2 in 1 Socket Micro SD/M2

PRODUCT NO. 107O-T X A X-R

FILE NAME 107O-TXAX-R_B_1