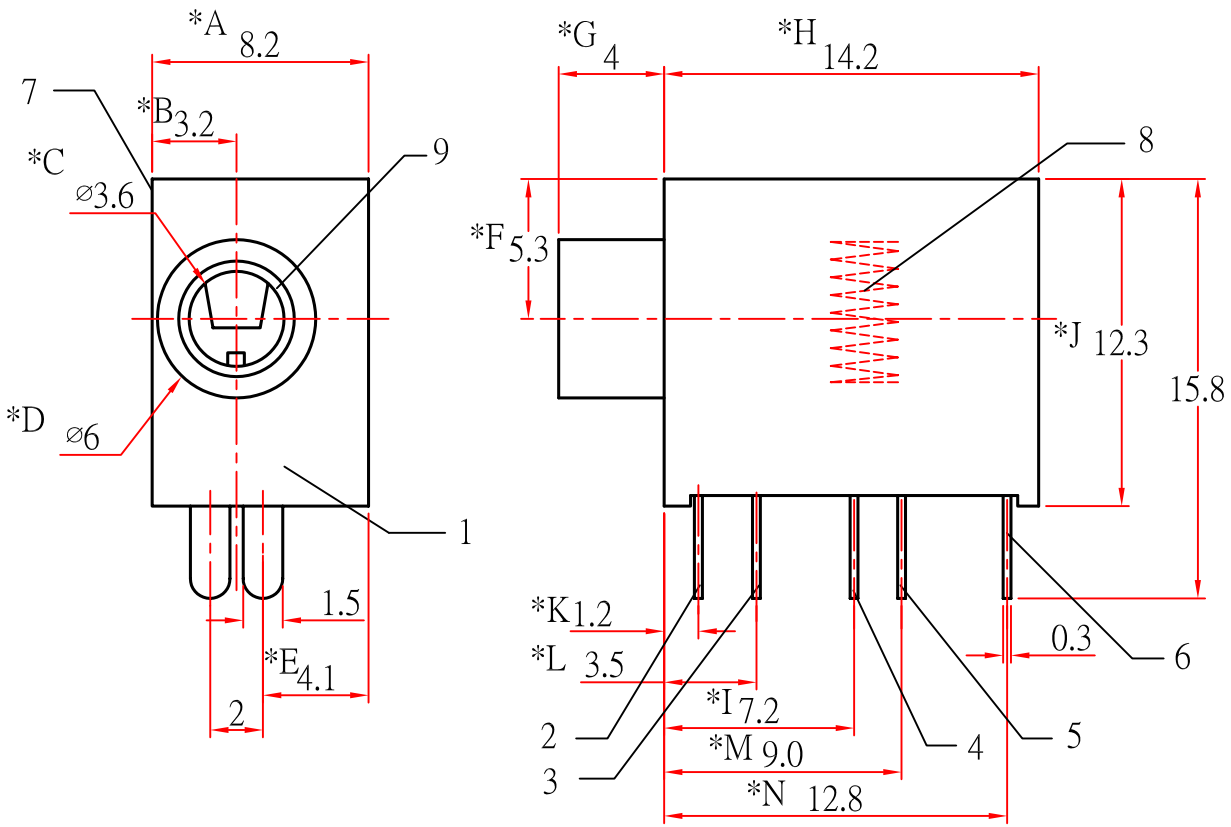

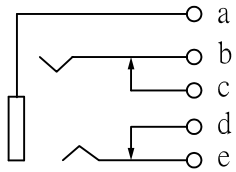

SCHEMATIC

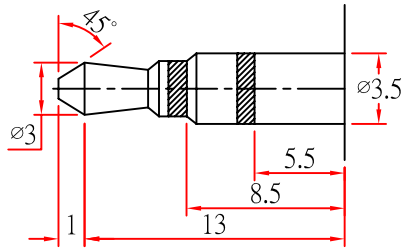

MATE PLUG

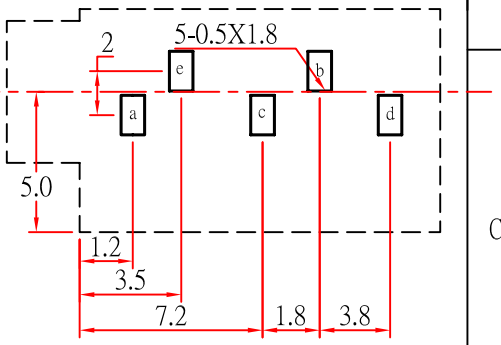

P.C.B.LAYOUT

* CRITICAL DIMENSION

NO.	PART NAME	MATERIAL	QTY	FINISHING
9	SOCKET	BRASS	1	Ni COATING
8	SPRING	SUS	2	TEMPER
7	COVER	PC	1	BLACK
6	TERMINAL E	BRASS	1	Ag COATING
5	TERMINAL D	BRASS	1	Ag COATING
4	TERMINAL C	BRASS	1	Ag COATING
3	TERMINAL B	PBS	1	Ag COATING
2	TERMINAL A	BRASS	1	Ag COATING
1	HOUSING	PC	1	BLACK

CHI FUNG ELECTRONICS CO.,LTD.

SERIES : STEREO JACKS		DRAWING NO:	CF-ENL-ST4191
PART NAME: ST-3645		GENERAL TOLERANCE	
UNIT : M M	DWN.	WITHIN 0.XXmm±0.15mm OVER 0.Xmm±0.25mm	
SCALE : 4:1	CHK'D		
REV : A/0	APPD.		