WS2.8-4LVU

Transient Voltage Suppressor

Features

- 400 Watts peak pulse power (t_p=8/20μs)
- Protects Two Line Pairs (Four lines)
- Low capacitance
- Low leakage current
- Low operating and clamping voltage
- Solid-state Punch through Avalanche TVS process technology

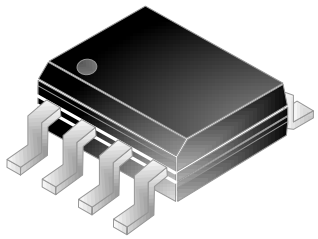

SO-8

IEC COMPATIBILITY (EN61000-4)

- **IEC 61000-4-2 (ESD) ±15kV (air), ±8kV (contact)**
- **IEC 61000-4-4 (EFT) 40A (5/50ns)**
- **IEC 61000-4-5 (Lightning) 24A (8/20μs)**

Mechanical Characteristics

- JEDEC SO-8 package
- Molding compound flammability rating: UL 94V-0
- Marking: Marking Code
- Packaging: Tape and Reel
- RoHS/WEEE Compliant

Applications

- Switching Systems
- WAN/LAN Equipment
- Desktops, Serves, Notebooks& Handhelds
- 10/100 Ethernet
- Base Stations
- Audio/Video Inputs

Schematic & PIN Configuration

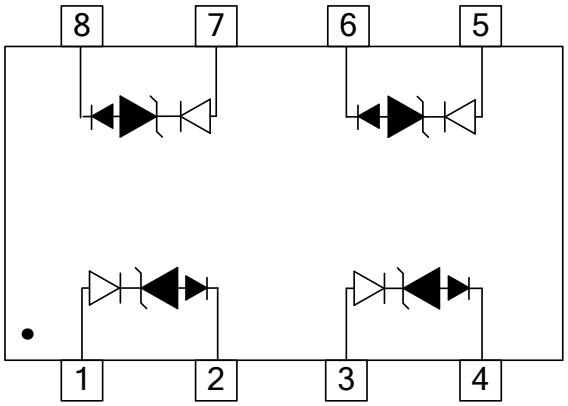

SO-8 (Top View)

Absolute Maximum Rating			
Rating	**Symbol**	**Value**	**Units**
Peak Pulse Power（t_p=8/20μs） see Figure1& Figure2	P_{PP}	400	Watts
Peak Pulse Current（t_p=8/20μs）	I_{PP}	24	A
Lead Soldering Temperature	T_L	260(10sec)	℃
Operating Temperature	T_J	-55 to + 125	℃
Storage Temperature	T_{STG}	-55 to +150	℃

Electrical Parameters (T=25℃)

Symbol	Parameter
I_{PP}	Maximum Reverse Peak Pulse Current
V_C	Clamping Voltage @ I_{PP}
V_{RWM}	Working Peak Reverse Voltage
I_R	Maximum Reverse Leakage Current @ V_{RWM}
V_{PT}	Punch-through Breakdown Voltage @ I_T
V_{SB}	Snap-Back Voltage @ I_{SB}
I_{SB}	Snap-Back Current
I_{PT}	Test Current
V_{PTF}	Forward Punch-through Breakdown Voltage @ I_F
I_{PTF}	Forward Test Current

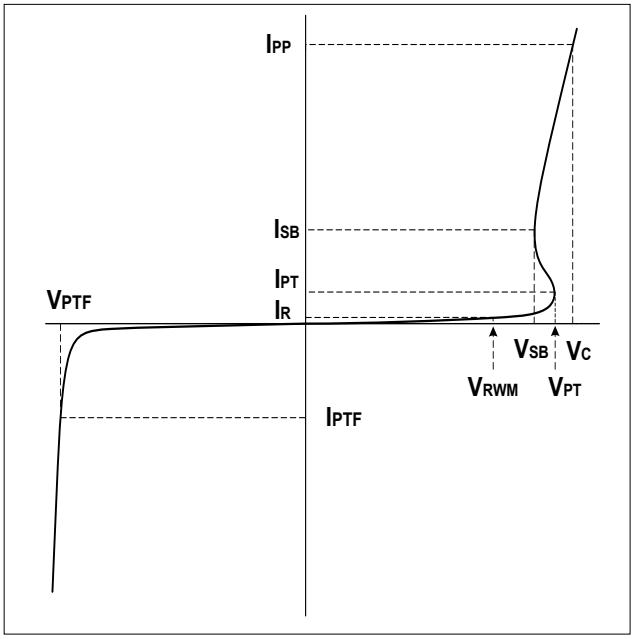

Electrical Characteristics(T=25℃)

WS2.8-4LVU						
Parameter	**Symbol**	**Conditions**	**Minimum**	**Typical**	**Maximum**	**Units**
Reverse Stand-Off Voltage	V_{RWM}	See Note1			2.8	V
Punch-through Voltage	V_{PT}	I_{PT}=2μA,See Note1	3.0			V
Reverse Leakage Current	I_R	V_{RWM}=2.8V See Note1			1	μA
Snap-Back Voltage	V_{SB}	I_{SB}=50mA ,See Note1	2.8			V

Electrical Characteristics (Cont.)

Parameter	Symbol	Conditions	Minimum	Typical	Maximum	Units
Clamping Voltage (Note1)	V_C	I_{PP}=2A, tp=8/20μs See Note1			6	V
Clamping Voltage	V_C	I_{PP}=5A, tp=8/20μs See Note1			9.5	V
Clamping Voltage	V_C	I_{PP}=24A, tp=8/20μs See Note1			17	V
Junction Capacitance	C_j	V_R = 0V, f = 1MHz See Note1		5		pF
Steer Diodes						
Reverse Breakdown Voltage	V_{BR}	I_T =10μA See Note4	50			V
Reverse Leakage Current	I_R	V_{RWM} = 2.8V See Note4			1	μA
Forward Voltage (Note3)	V_F	I_F=1A See Note5			2	V

NOTES:

1. Device measured between pin 1 to 2, pin 3 to 4, pin 5 to 6 and pin 7 to 8.
2. The 8/20μs test pulse wave is shown in figure3, and the clamping voltage vs. I_{PP} is shown in figure4 .
3. The Junction Capacitance vs. Reverse Voltage is shown in figure5.
4. Each Steer Diode integrated in the WS2.8-4LVU reversely connected with a TVS Diode in series
5. The Forward Voltage vs. Forward Current for Steer diode is shown in figure6.

Typical Characteristics

Figure 1: Peak Pulse Power vs. Pulse Time

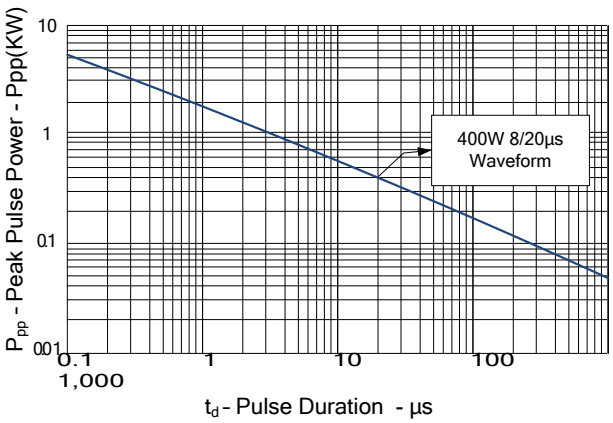

Figure 2: Power Derating Curve

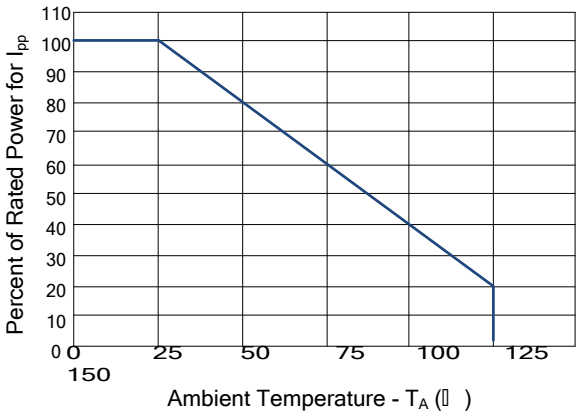

Figure3: Pulse Waveform

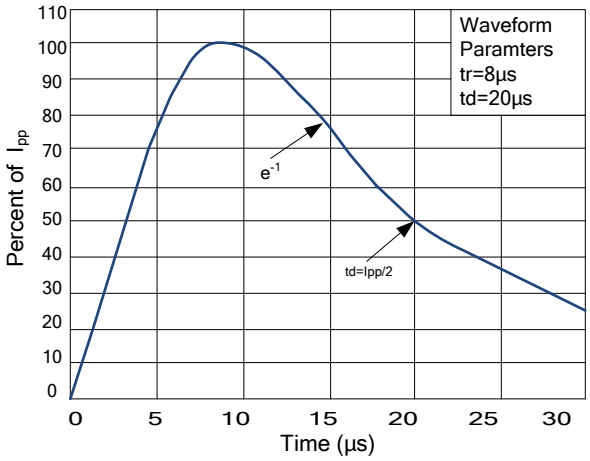

Figure 4: Clamping Voltage vs. Peak Pulse Current

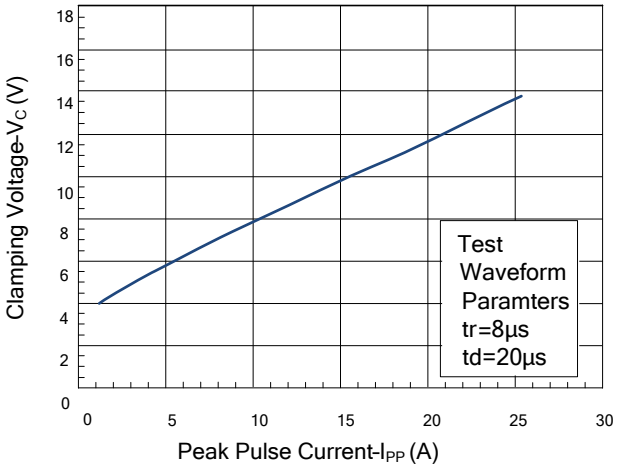

Figure 5: Capacitance vs. Reverse Voltage

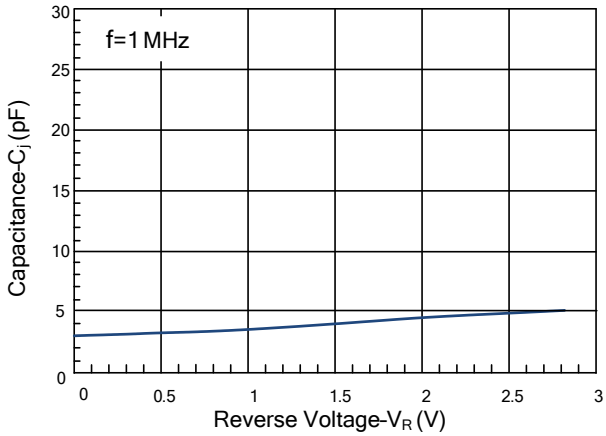

Figure 6: Forward Voltage vs. Forward Current

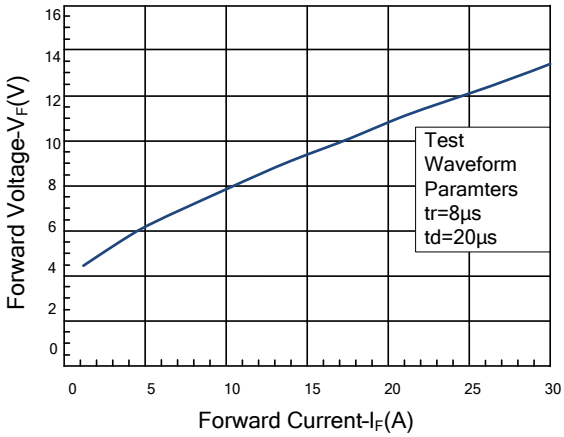

Application Information

The WS2.8-4LVU is designed to providing protection for electronic equipment that is susceptible to damage caused by Electrostatic Discharge (ESD), Electrical Fast Transients (EFT) and tertiary lightning effects. This product is offered in a unidirectional configuration and provides both common-mode and differential-mode protection.

Unidirectional Common-mode Protection

The WS2.8-4LVU protects four lines in a common-mode configuration.

- Pin 1 is connected to Line1.
- Pin 3 is connected to Line2
- Pin 5 is connected to Line3.
- Pin 7 is connected to Line4
- Other Pins are connected to ground.

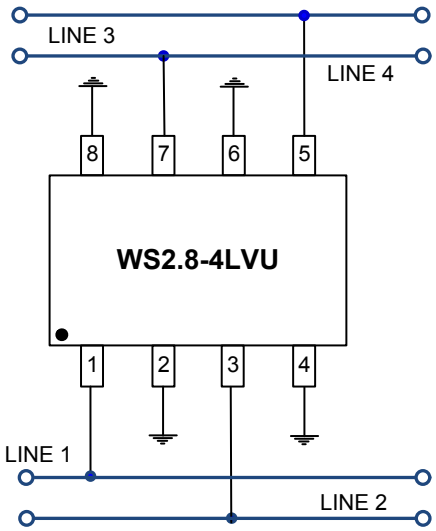

Bidirectional Common-mode Protection

The WS2.8-4LVU device provide two lines of bidirectional protection in a common-mode configuration.

- Pin1 &Pin8 are connected to Line1
- Pin4&Pin5 are connected to Line2
- Other Pins are connected to ground.

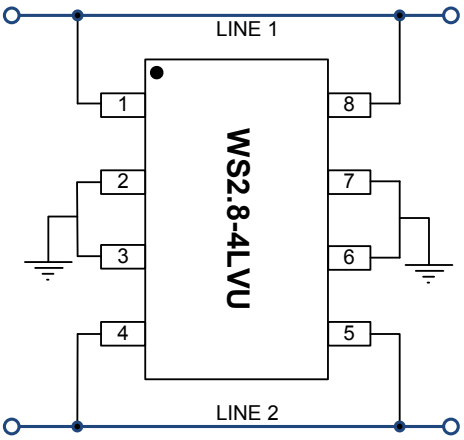

Bidirectional Differential-mode Protection

The WS2.8-4LVU device provide four lines of bidirectional protection in a differential-mode configuration.

- Pin1 & Pin8 is connected to Line1
- Pin2 & Pin7 is connected to Line2
- Pin3 & Pin6 is connected to Line3
- Pin4 & Pin5 is connected to Line4
- Line1&Line2 compose Line Pair1 ,Line3&Line4 compose Line Pair2

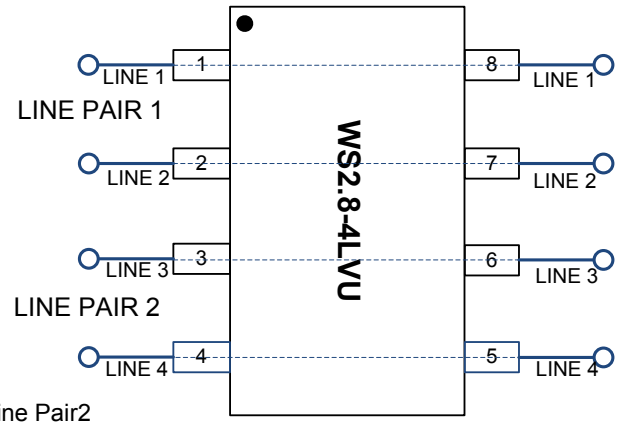

Main Application

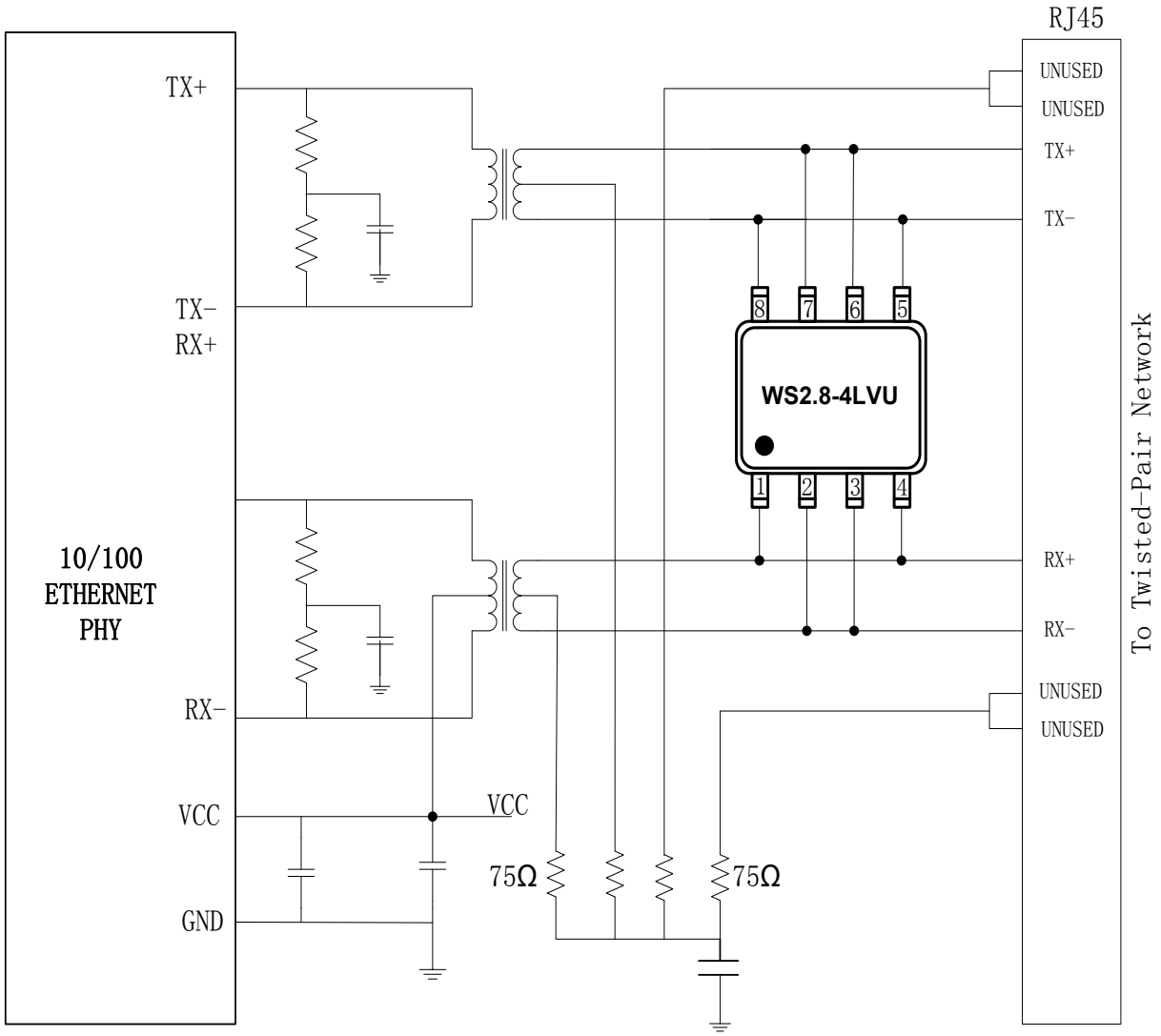

10/100M Ethernet Protection Circuit

Main Application (Cont)

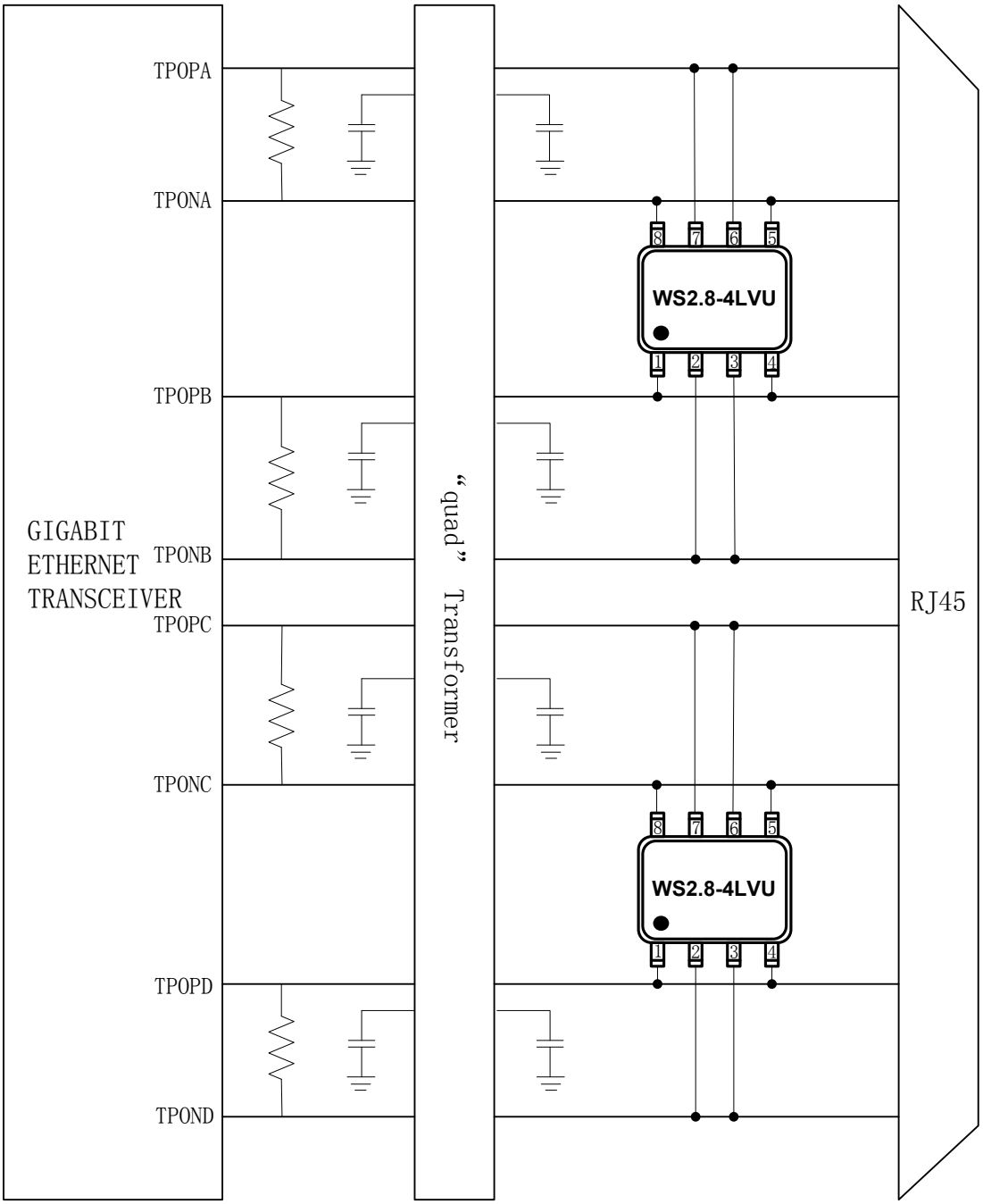

Gigabit Ethernet Protection Circuit

Outline Drawing – SO-8

PACKAGE OUTLINE

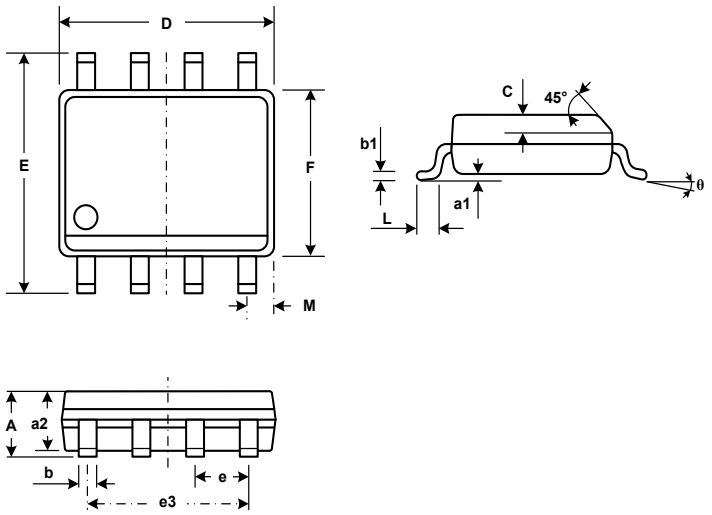

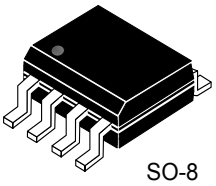

DIMENSIONS

SYMBOL	INCHES		MILIMETER	
	MIN	MAX	MIN	MAX
A	0.054	0.068	1.35	1.75
a1	0.004	0.008	0.10	0.25
a2	0.050	0.060	1.25	1.50
D	0.189	0.196	4.80	5.00
F	0.150	0.157	3.80	4.00
E	0.229	0.244	5.80	6.20
e	0.05BSC	0.05BSC	1.27BSC	1.27BSC
L	0.016	0.049	0.40	1.250
θ	0°	10°	0°	10°

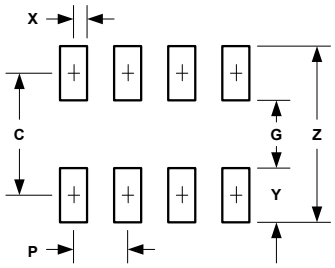

DIMENSIONS

DIM	INCHES	MILLIMETERS
C	0.205	5.20
G	0.160	4.06
P	0.050	1.27
X	0.015	0.38
Y	0.045	1.14
Z	0.291	7.40

Notes

1. This land pattern is for reference purposes only consult your manufacturing group to ensure your company's manufacturing guidelines are met.
2. Reference ipc-sm-782a..

Marking Codes

Part Number	WS2.8-4LVU
Marking Code	WS2.8-4LVU