Shenzhen Hi-link Electronic Co.,Ltd

HLK-B11

Serial port -Bluetooth Transmission Module

Specifications

Version：V1.0 Revise Date：2020-6-15

Contents

Icon index

1. Brief Introduction

HLK-B11 is a single-mode ble5.0 Bluetooth transparent module developed and produced by Hailing electronics. It integrates Bluetooth radio frequency chip and a small number of peripheral devices. It is embedded with 32-bit MCU with low power consumption, 500kb flash memory, 64KB SRAM and rich peripheral resources.

In accordance with Bluetooth 5.0 specification, it can be used as a Bluetooth slave device to be connected by various Bluetooth host devices

The module's serial port Bluetooth two-way transparent transmission function is very convenient to use. Users do not need to understand the complex Bluetooth protocol stack, just connect the customer's equipment or MCU's serial port to the module, and the module will automatically complete the two-way data forwarding between the serial port and Bluetooth, which is the bridge between the user's MCU serial port and Bluetooth equipment, so that users can quickly and simply use the serial port equipment. Realize Bluetooth wireless transmission function on.

It supports at command mode, and can query or set basic parameters of the module through serial at command, such as device name, serial port baud rate, etc.

Our company develops and provides rich testing tools and use documents, and provides app demo for testing, so that users can quickly start to be familiar with and apply this module. Our company can also provide flexible and rich customized development services according to the specific needs of customers.

The functional block diagram of HLK-B11 module is as follows:

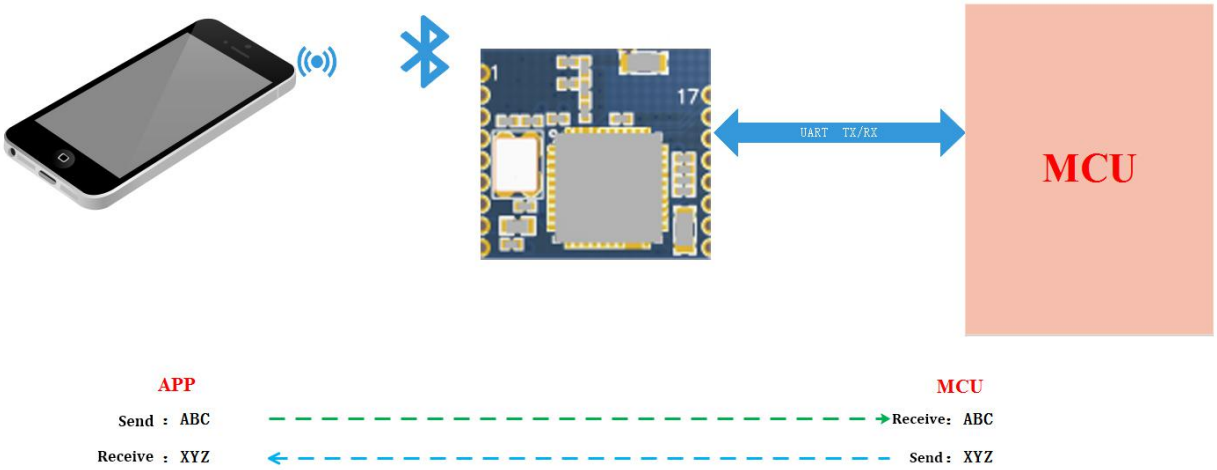

Figure 1 Functional block diagram

2. Characteristics

- Support bluetooth 5.0
- Built in 32-bit MCU
- Main frequency supports 64MHz
- Bulit in 64KB RAM，500KB FLASH
- Working voltage 2.5 ~ 3.6V
- Peripheral：
  - Up to 11 gpios
  - 1 x UART，Serial port baud rate up to 3.2 MHz
  - 5x PWM
  - High precision temperature sensor on chip
- External antenna
- Working temperature：-40℃ to 85℃

3. Main application fields

The serial port-Bluetooth two-way transparent transmission provided by HLK-B11 provides a simple and flexible data channel, which can be widely used in various devices that require Bluetooth wireless communication and transmission.

Common application scenarios include but are not limited to the followings:

- **Smart home / household appliances**

  Control smart sockets, smart lights, smart door locks, etc., through mobile phones

- **Internet of things**

- **Instruments and meters**

  Connect wirelessly through Bluetooth and read instrument data, etc.

- **Industrial and agricultural control**

  Connect various control or sensing devices wirelessly through Bluetooth, read and control, etc.

- **Medical health**

  Health data monitoring, wireless care equipment, etc.

- **Automobile electronics**

- **Toy entertainment**

4. Dimension package

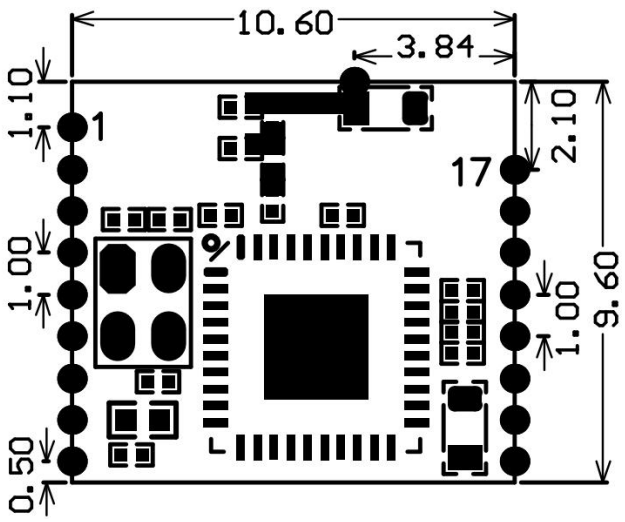

Figure 2 Dimensions diagram

5. Pin definition

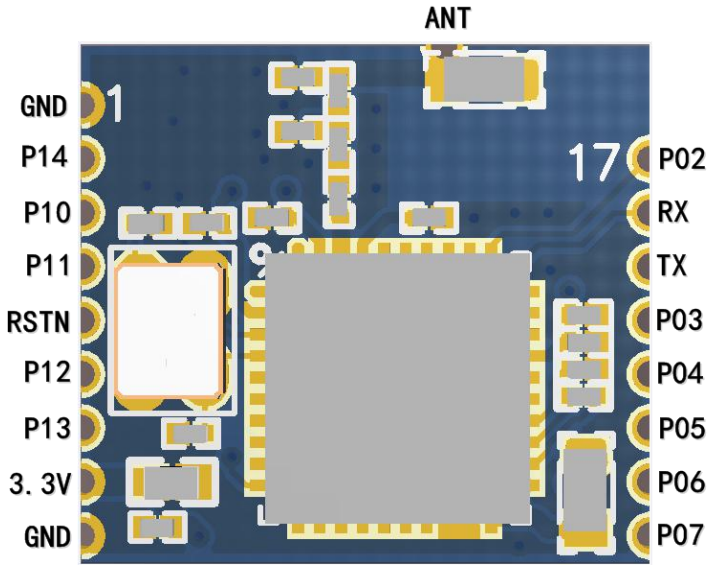

Figure 3 Pin diagram

PIN	Symbol	IO type	Function
1	GND	P	Power reference ground
2	P14	I/O	PWM[4]
3	P10	I/O	PWM[0](20mA)
4	P11	I/O	Key input pin, valid at low level
5	RSTN	AO	Module reset input pin, valid at low level
6	P12	I/O	PWM[2]
7	P13	I/O	PWM[3]
8	3.3V	P	Module power supply 3.3V
9	GND	P	Power reference ground
10	P07	I/O	GPIO7
11	P06	I/O	GPIO6
12	P05	I/O	GPIO5
13	P04	I/O	GPIO4
14	P03	I/O	GPIO3
15	TXD	I/O	UART output
16	RXD	I/O	UART input
17	P02	I/O	Status indication LED output, valid at low level
18	ANT	-	Antenna interface

Table 1 Pin function table

Note： P represents power supply pin, I / O represents I / O pin, AO represents analog I / O pin

6. Typical application circuit

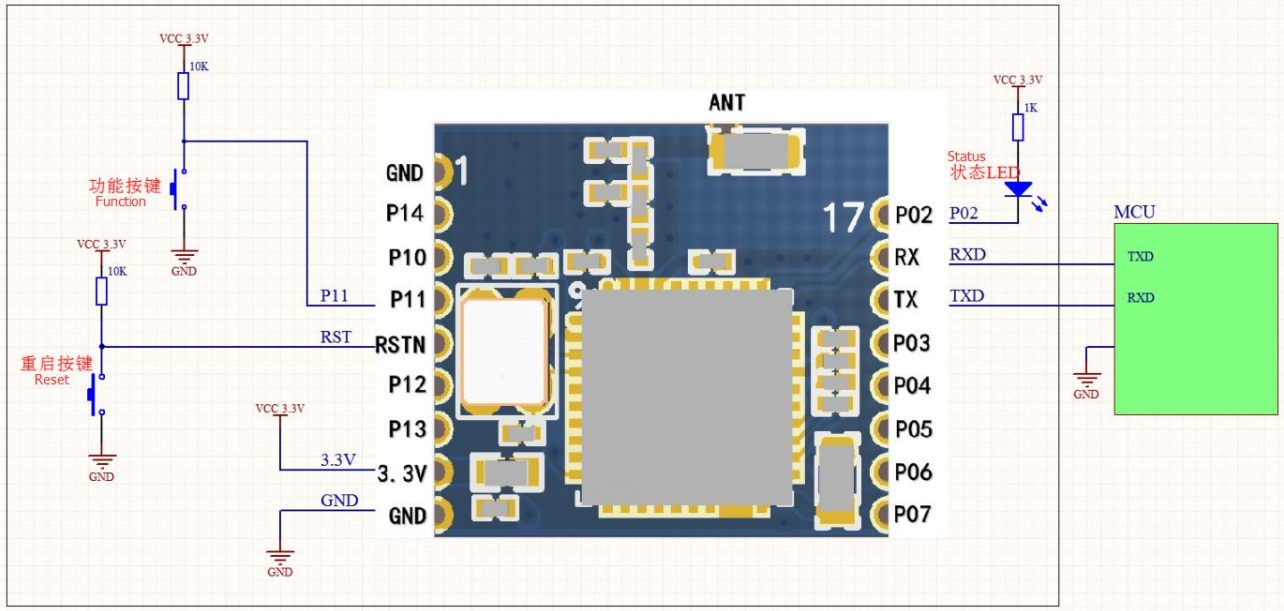

Figure 4 Typical application circuit

7. Electrical parameters

Parameters	Description	Min value	Max value	Unit
Ts	Storage temperature	-40	105	℃
VDD	Power supply	2.5	3.6	V
IVDD	Average working current	5	8	mA
Electrostatic discharge voltage (mannequin)	TAMB-25℃	-	2	KV
Electrostatic discharge voltage (machine model)	TAMB-25℃	-	0.5	KV

Table 2 Electrical parameter table

8. Recommended reflow temperature

When the module passes through the furnace for the second time, please strictly follow the temperature curve. Too much temperature deviation of reflow soldering will cause module damage.

Temperature setting (° C)									
Temperature region	1	2	3	4	5	6	7	8	
Upper region	125	135	155	185	195	225	240	230	
Lower region	125	135	155	185	195	225	240	230	
Conveyor belt speed: 70.0 cm / min									

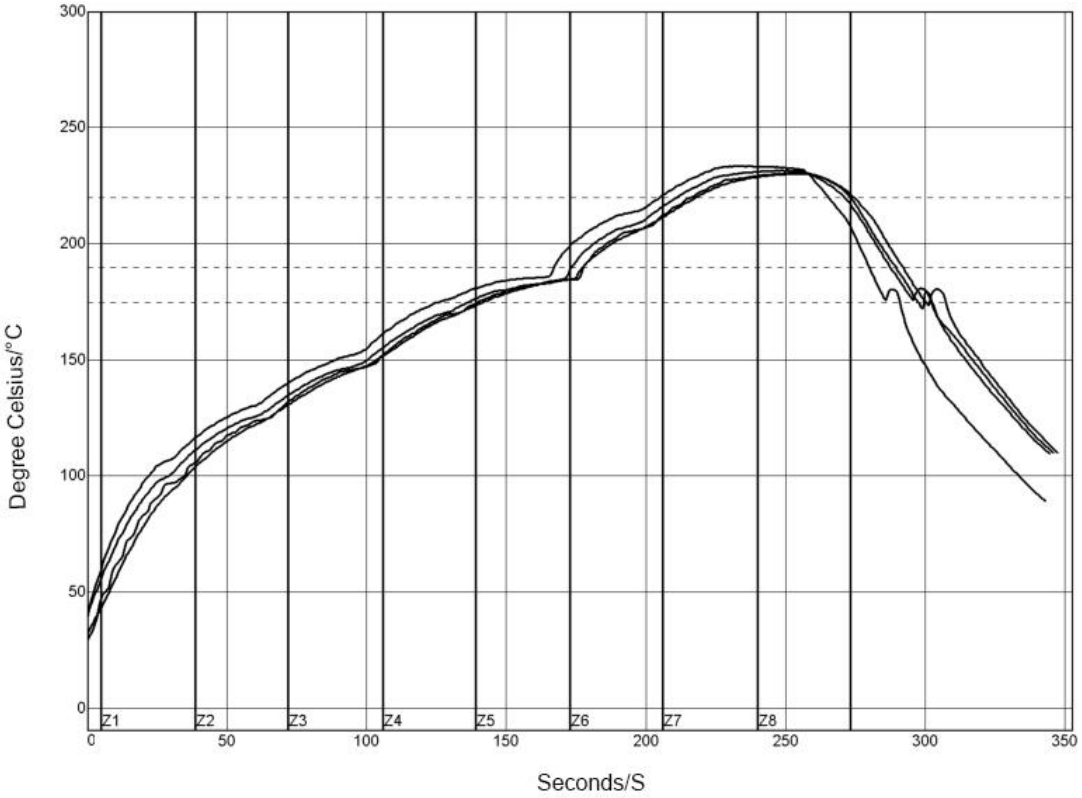

PWI= 94%	Constant temperature time 175~190°C			Reflux time/220° C		Max temp.
<TC2>	35.53	-82%	55.58	-72%	230.28	-94%
<TC3>	37.66	-74%	58.66	-57%	230.56	-89%
<TC4>	41.52	-62%	60.63	-47%	233.62	-28%
<TC5>	37.07	-76%	60.44	-48%	231.67	-67%
Temp. difference	5.99		5.05		3.34	

Process boundary

Solder paste: **System Default for Reflow**

Statistic name	Minimum limit	Maximum limit	Unit
Constant temperature time 175~190 °C	30	90	S
Reflow time -220°C	50	90	S
Maximum temp.	230	240	°C

Table 3 Recommended reflow soldering temperature

9. Revised record

Date	Version	Modify contents
2020.6.15	1.0	Initial version

10. Technical support and contact information

Shenzhen Hi-Link Electronic Co.,Ltd

Address： 3F, Caiyue Mansion West, No.24 Liuxian Avenue, Longhua district, Shenzhen 518131

Tel：0755-23152658/83575155

Web： www.hlktech.com