* Product Name: Rocker Switch;
* Model No: YSR-14
* Voltage Resistance: 2000VAC,1MIN;
* Operating Temperature: T85
* Electrical Life:more than 10,000cycles
* Contact Rating:UL CUL:3/6A 250/125VAC, 5/10A 250/125VAC
6.5/13A 250/125VAC,10/15A 250/125VAC
15/20A 250/125VAC,1/3HP 125VAC
VDE: 13A 250V~

KNOB COLOR	BLACK;RED;GREEN;ORANGE;BLUE;...		
BASE COLOR	GRAY;BLACK;WHITE;...		
KNOB SHAPE	TYPE C:	Unilluminate	YSR-14-12 1P2T 3P
Illuminate	YSR-14-11/N 1P1T 3P		YSR-14-11 1P1T 2P

Wiring Diagram

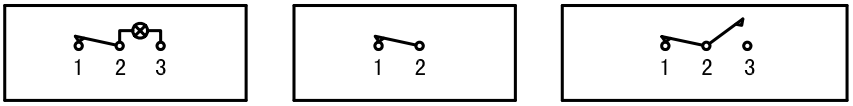

YSR-14-11/N On-Off(Illuminate) | YSR-14-11 On-Off(Unilluminate) | YSR-14-12 On-On(Unilluminate)

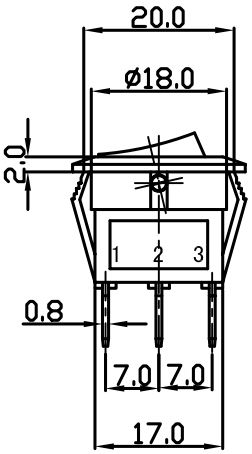

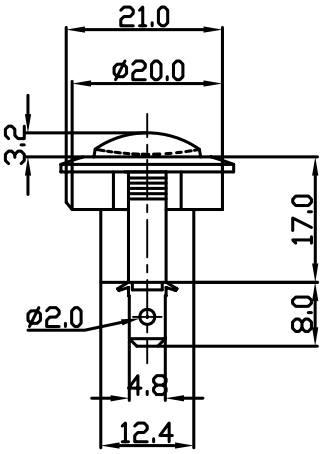

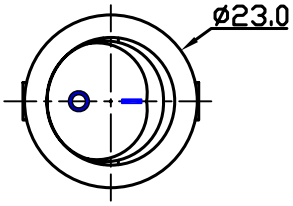

Panel Installation Size

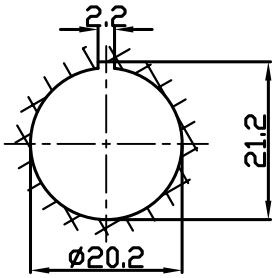

Panel Installation
Thickness 1 ~ 4mm

Тел.: (495) 795-0805
Факс: (495) 545-0869
Эл. почта: info@rct.ru
Веб: www.rct.ru