D1RFRD006

REVISION RECORD				
REV	ECO	DESCRIPTION	DRFT	DATE
1		增加UL刻字	CSX	03/16/07
2		品名、料号增加环保标识“OD”	Yej	12/08/07

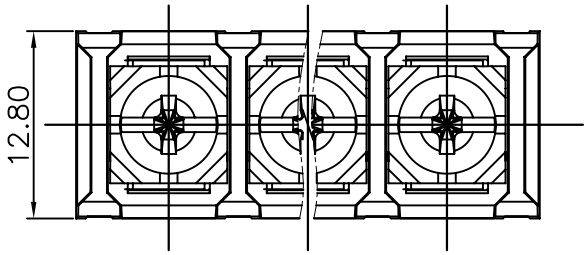

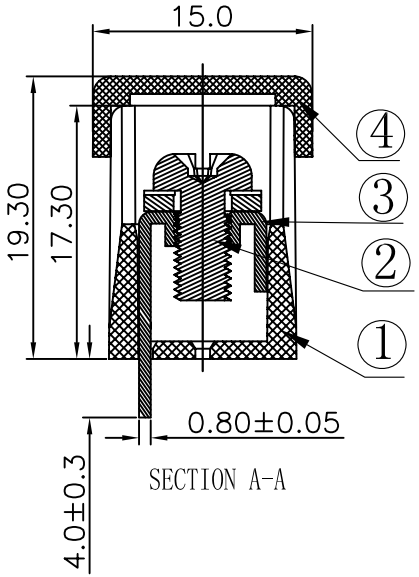

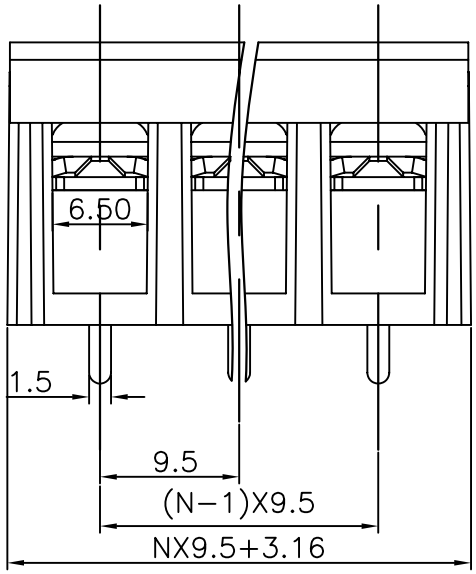

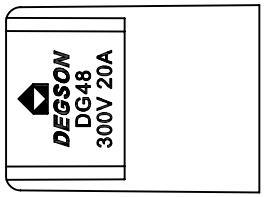

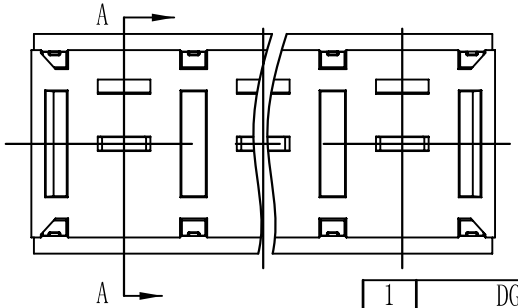

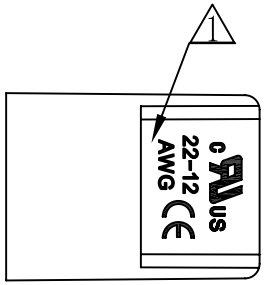

Notes:

1. Pitch:9.5mm ,Poles:2-22P
2. Rated current:20A
3. Rated voltage:300V
4. Operation temperatures:-40° C~+105° C
5. Insulation Withstand Voltage:AC2000V/Min
6. Insulation Resistance:500MΩ/DC500V
7. Wire Range:22~12AWG
8. Max.Torque Value:12.24kgf.cm
9. Undimensioned Tolerances:

Pitch range in mm			Naminal dimension range in mm					—
to 6	over 6 to 10	over 10 to 24	to 30	over 30 to 60	over 60 to 100	over 100 to 150	over 150	⌒ ▱
±0.10	±0.15	±0.25	±0.2	±0.3	±0.5	±0.7	±1.0	0.05/10

ITEM	NAME OF PART	NO. OF PART	Q"TY	MATERIAL	NOTES
1	DG48-B-Housing	5051A0YXXA(H)	1	PA66+23%GF	UL94V-0
4	DG48-Cover	5051C07XXA(H)	1	PC	
3	DG58S Pin header	5008B00030(H)	XX	Brass	SnCe plated
2	M4*8(7.5*7.5)bright Screws	S000000570(H)	XX	Steel	Ni plated

DETACHED LISTS

MM (INCH)

TOLERANCES EXCEPT AS NOTED

MM	
.0 ±	±
.00 ±	±
.000 ±	±

ANGLES ± 1°

THIRD ANGLE PROJECTION

DFTO Zhuwm	DATE 01/13/06"	
CHKD	DATE	
MFO	DATE	
APPVL	DATE	
MATERIAL :		
G.E :		
FINISH :		
SCALE : 1:1		

DEGSON®

宁波高正电子有限公司
DEGSON ELECTRONICS CO., LTD

NAME

DG48S-B-XXP-1Y-00A(H)

DRAWING NO. DG48S-E02 /PART NO.

SIZE A3 REV T2 12/06/07"

DO NOT SCALE DRAWING

SHEET 1 OF 1