D1RFRD006

REVISION RECORD				
REV	ECO	DESCRIPTION	DRFT	DATE

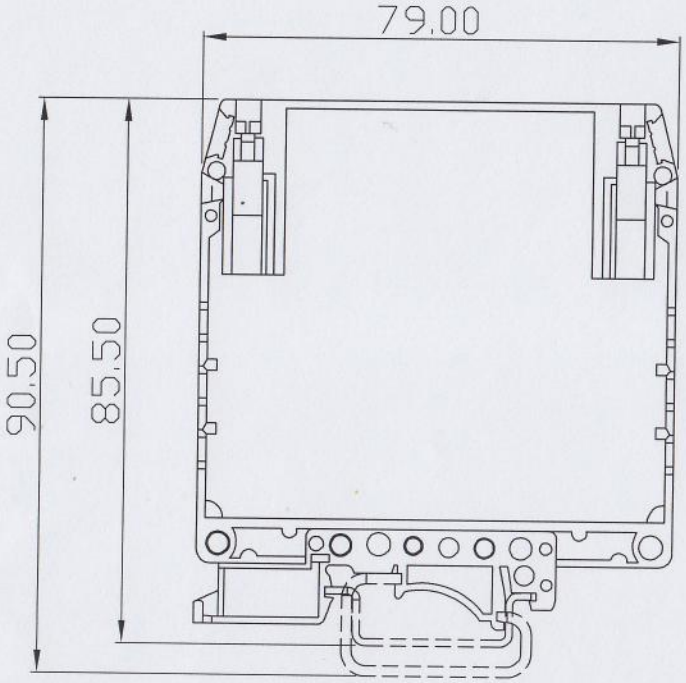

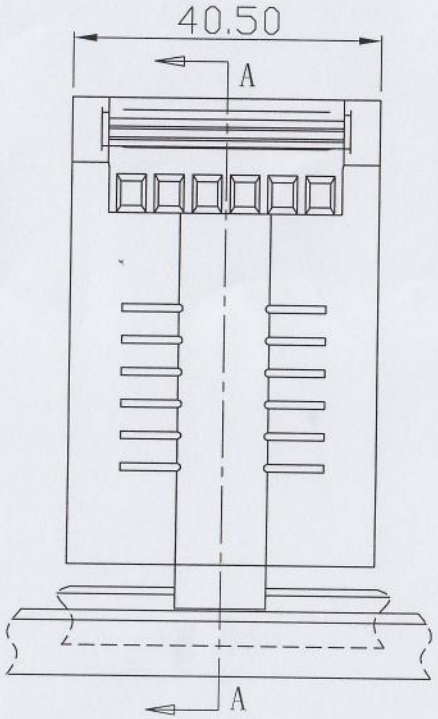

Notes:

1. Pitch:40.0mm ,Poles:6P
2. Rated voltage/current:UL1059 300V/10A
   IEC 250V/16A
3. Operation temperatures:-40℃～+105℃
4. Withstanding Voltage:AC2000V/1Min
5. Insulation Resistance:5000MΩ/DC1000V
6. Wire Range:24～12AWG, 2.5mm²
7. Max. Torque Value:M3.0, 5.10kgf.cm
8. Undimensioned Tolerances:

Pitch range in mm			Nominal dimension range in mm					
to 6	over 6 to 10	over 10 to 24	to 30	over 30 to 60	over 60 to 100	over 100 to 150	over 150	
±0.10	±0.15	±0.25	±0.2	±0.3	±0.5	±0.7	±1	0.05/10

浙高正电子
2009.1.13
资料室

ITEM	NAME OF PART	NO. OF PART	Q"TY	MATERIAL	NOTES
1					

DETACHED LISTS

MM (INCH)

TOLERANCES EXCEPT AS NOTED

MM	
.0 ±	±
.00 ±	±
.000 ±	±

ANGLES ± 1°

THIRD ANGLE PROJECTION

DFTD YHG DATE 07/13/09
CHKD DATE 7/14/09
MFD DATE
APPVL Hong DATE 07.14.09

MATERIAL :

G.E :

FINISH:

SCALE : 1:1

DEGSON® 宁波高正电子有限公司 DEGSON ELECTRONICS CO., LTD

NAME FEGM-06P-1Y-00A(H)

DRAWING NO. FEGM-06P-E01 SIZE A3 REV T0-1 07/13/09

/PART NO.

DO NOT SCALE DRAWING SHEET 1 OF 1