REV	CONTENT	CHK	DATE
V0.0	CONTENT	CXL	20.05.11

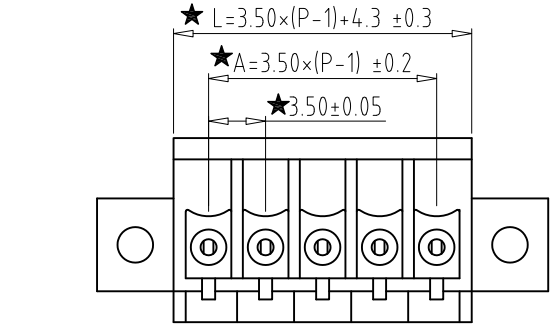

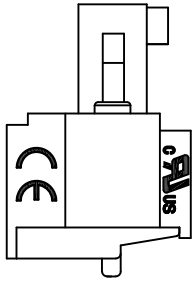

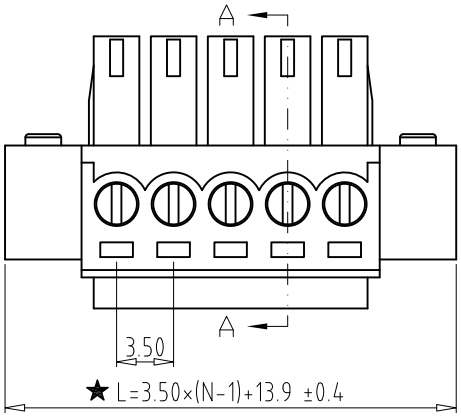

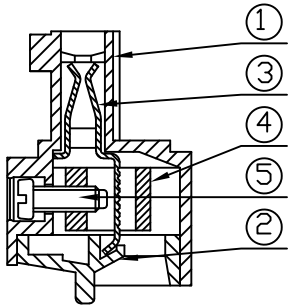

SECTION A-A

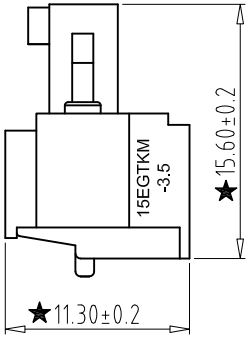

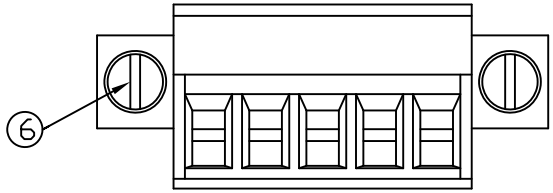

Electrical :

	UL	IEC
1.Rated Voltage :	300V	250V
2.Rated Current :	8A	7A
3.Torque Value :	M2 , 1.77Lb.in	M2, 0.2N.m
4.Wire Range:	28-16AWG	0.5-1.5mm^2

5.Stripping Length : 6-7mm
6.Withstanding Voltage : AC1600V/1Min.
7.Operating Temperature : -40°C~+105°C
8.RoHS Compliance
9.Safty Approval : c UL us CE
10." ★ " is the key quality control point

15EGTKM - 3.5 - XXP - X X - XX
① ② ③ ④ ⑤ ⑥

① Sereies No.

② Pitch

③ Poles
02 02Contacts
03 03Contacts
...
24 24Contacts

④ 1 Single Pitch
2 Double Pitch

⑤ Color: 1 Grey
2 Blue
3 Black
4 Green(Standard For AH)
5 Orange
6 Red
7 Transparent
8 Yellow
9 White

⑥ Customer Request : 00--Standard

ITEM	NAME OF PART	NO. OF PART	Q"TY	MATERIAL	NOTE
6	SCREW-02	XX	2	Steel	Zn Plated
5	SCREW-01	XX	P	Steel	Zn Plated
4	BLOCK	XX	P	Brass	Ni Plated
3	CLAMP	XX	P	Phosphor Bronze	Ni Plated
2	COVER	XX	1	PA66(UL94V-0)	SEE NOTE
1	HOUSING	XX	1	PA66(UL94V-0)	SEE NOTE

DWG.	CXL	DATE	20.05.11	SIZE	A4	UNITS mm	SHEET/OF 1 / 1
CHK.		DATE		SCALE	1:1		
APP.		DATE		NAME	15EGTKM-3.5-XXP-XX-00		
Golten 宁波冠泰电子有限公司 NINGBO GOLTEN ELECTRONICS CO., LTD.				DWGNO.	XXXX		

Total Pitch Tolerances in mm									Nominal dimension range in mm									⊥		≑	—		//
over 0 to 30	over 30 to 53	over 53 to 70	over 70 to 90	over 90 to 115	over 115 to 150	over 150 to 250	over 250 to 350	over 350 to 500	over 0 to 30	over 30 to 53	over 53 to 70	over 70 to 90	over 90 to 115	over 115 to 150	over 150 to 200	over 200 to 250	over 250 to 320	over 0 to 10	over 10	all	over 0 to 100	over 100 to 150	over 150
±0.18	±0.20	±0.25	±0.3	±0.35	±0.44	±0.60	±0.70	±0.85	±0.20	±0.25	±0.30	±0.35	±0.44	±0.55	±0.70	±0.80	±0.90	0.2	0.3	0.3	0.2	0.3	0.5