REV	CONTENT	CHK	DATE
V0.0	CONTENT	MYZ	21.06.05

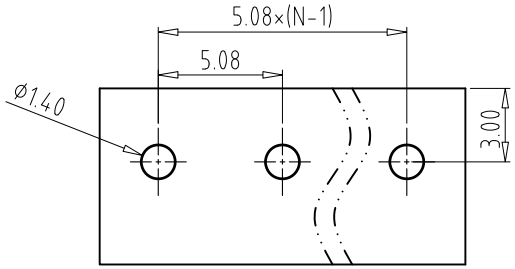

PCB LAYOUT

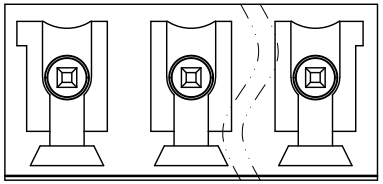

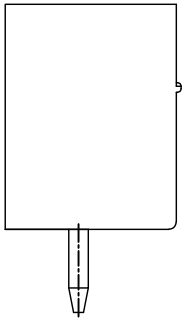

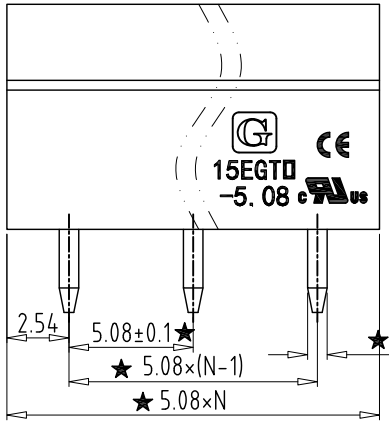

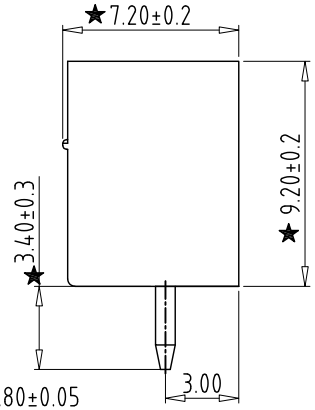

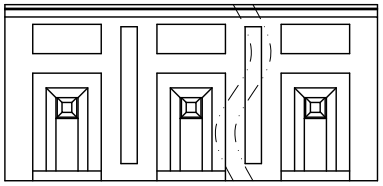

Electrical :

	UL	IEC
1.Rated Voltage :	300V	450V
2.Rated Current :	8A	7A

3.Withstanding Voltage : AC1600V/1Min.
4.Operating Temperature : -40°C~+105°C
5.RoHS Compliance
6.Safty Approval : c UL us CE
7."★" is the key quality control point

15EGTVC - 5.08 -XXP - X X - 00

① ② ③ ④ ⑤ ⑥

① Sereies NO.

② Pitch

③ Poles
02 02Contacts
03 03Contacts
...
24 24Contacts

④ 1 Single Pitch
2 Double Pitch

⑤ Color: 1 Grey
2 Blue
3 Black
4 Green
5 Orange
6 Red
7 Transparent
8 Yellow
9 White

⑥ Customer Request: 00--Standard

Total Pitch Tolerances in mm									Nominal dimension range in mm									⊥		≒	—		//
over 0 to 30	over 30 to 53	over 53 to 70	over 70 to 90	over 90 to 115	over 115 to 150	over 150 to 250	over 250 to 350	over 350 to 500	over 0 to 30	over 30 to 53	over 53 to 70	over 70 to 90	over 90 to 115	over 115 to 150	over 150 to 200	over 200 to 250	over 250 to 320	over 0 to 10	over 10	all	over 0 to 100	over 100 to 150	over 150
±0.18	±0.20	±0.25	±0.3	±0.35	±0.44	±0.60	±0.70	±0.85	±0.20	±0.25	±0.30	±0.35	±0.44	±0.55	±0.70	±0.80	±0.90	0.2	0.3	0.3	0.2	0.3	0.5

2	PIN HEADER		XX	N	BRASS		Tin Plated	
1	HOUSING		XX	1	PA66 UL94V-0		SEE NOTE	
ITEM	NAME OF PART		NO. OF PART	Q"TY	MATERIAL		NOTE	
DWG.	MYZ	DATE	21.06.05	SIZE	A4	UNITS mm	SHEET/OF	1 / 1
CHK.		DATE		SCALE	1:1			
APP.		DATE		NAME	15EGTVC-5.08-XXP-XX-00			
Golten 宁波冠泰电子有限公司 NINGBO GOLTEN ELECTRONICS CO., LTD.				DWGNO.	XXXX			