REV	CONTENT	CHK	DATE
V0.0	CONTENT	DLL	20.05.11

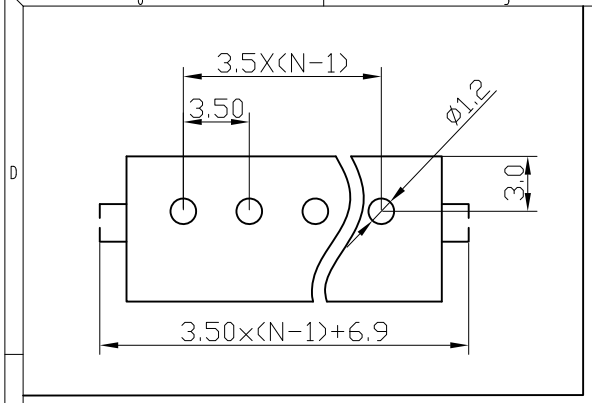

NOTES1:

UL Standard

1.Rate voltage/current : 300V/8A

2.Withstanding voltage : AC1600V/1Min

IEC Standard

1.Rate voltage(V) : 250V

2.Rate current(A) : 7A

NOTES2:

1.Pitch : 3.50mm

2.Poles : N=02~22p

3.Operating temperature : -40℃~+105℃

4.RoHS Compliance

5."★"Quality control size.

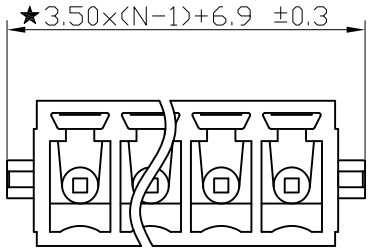

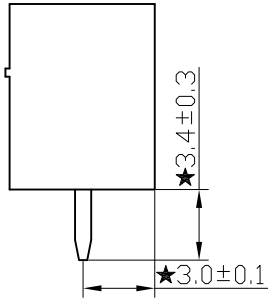

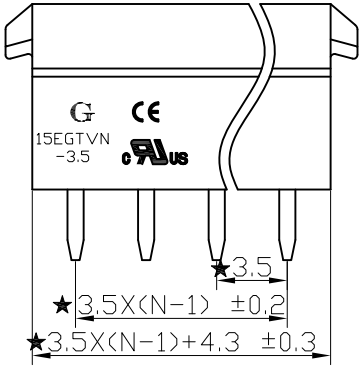

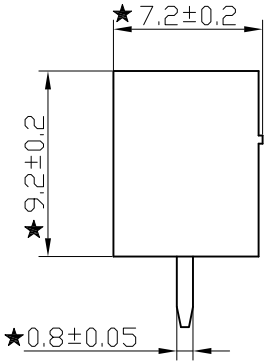

15EGTVN - 3.5 - XXP - X X - 00

- Series No: 15EGTVN
- Pitch: 3.5
- Poles: XXP
  - 02 02Contacts
  - 03 03Contacts
  - ...
  - 20 20Contacts
- Single Pitch / Double Pitch: X
- Color: X
  - 1 Grey
  - 2 Blue
  - 3 Black
  - 4 Green
  - 5 Orange
  - 6 Red
  - 7 Transparent
  - 8 Yellow
  - 9 White
- Customer Request: 00
  - 00-Standard

Total Pitch Tolerances in mm									Nominal dimension range in mm									⊥		⌯	—		//
over 0 to 30	over 30 to 53	over 53 to 70	over 70 to 90	over 90 to 115	over 115 to 150	over 150 to 250	over 250 to 350	over 350 to 500	over 0 to 30	over 30 to 53	over 53 to 70	over 70 to 90	over 90 to 115	over 115 to 150	over 150 to 200	over 200 to 250	over 250 to 320	over 0 to 10	over 10	all	over 0 to 100	over 100 to 150	over 150
±0.18	±0.20	±0.25	±0.3	±0.35	±0.44	±0.60	±0.70	±0.85	±0.20	±0.25	±0.30	±0.35	±0.44	±0.55	±0.70	±0.80	±0.90	0.2	0.3	0.3	0.2	0.3	0.5

ITEM	NAME OF PART	NO. OF PART	Q"TY	MATERIAL	NOTE
1	Pin Header	XXXXXX	1	Brass	Tin plated
1	Housing	XXXXXX	1	PA66	UL94V-0

DWG.	DLL	DATE	20.06.12	SIZE	A4	UNITS	mm	SHEET/OF	1 / 1
CHK.		DATE		SCALE	1:1				
APP.		DATE		NAME	15EGTVN-3.5-XXP-XX-00				
Golten 宁波冠泰电子有限公司 NINGBO GOLTEN ELECTRONICS CO., LTD.				DWGNO.	XXXX				