3A, 800V N-CHANNEL MOSFET

GENERAL DESCRIPTION

SVF3N80M/F/D is an N-channel enhancement mode power MOS field effect transistor which is produced using Silan proprietary F-Cell™ structure VDMOS technology. The improved planar stripe cell and the improved guard ring terminal have been especially tailored to minimize on-state resistance, provide superior switching performance, and withstand high energy pulse in the avalanche and commutation mode.

These devices are widely used in AC-DC power suppliers, DC-DC converters and H-bridge PWM motor drivers.

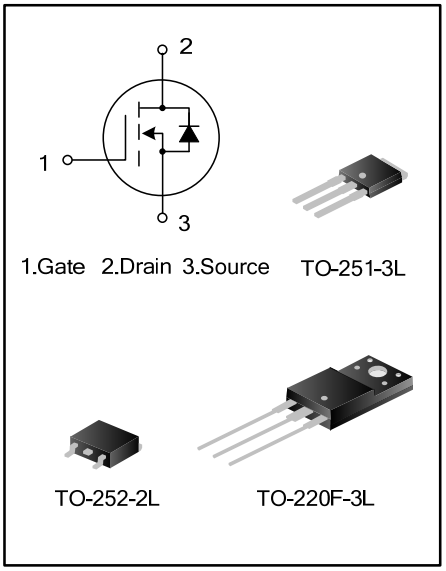

FEATURES

- 3A, 800V, $R_{DS(on)(typ.)}$=3.8Ω@V_{GS}=10V
- Low gate charge
- Low Crss
- Fast switching
- Improved dv/dt capability

NOMENCLATURE

S V F X N E X X X

Silan VDMOS Code of F-Cell process

Nominal current,using 1 or 2 digits:
Example:4 denotes 4A,
10 denotes 10A,
08 denotes 0.8A

N denotes N Channel

Special Features indication, May be omitted.
Example: E denotes embeded ESD structure

Nominal Voltage,using 2 digits
Example: 60 denotes 600V,
65 denotes 650V.

Package information.
Example:F:TO-220F;
M:TO-251;D:TO-252.

ORDERING INFORMATION

Part No.	Package Type	Marking	Material	Packing
SVF3N80M	TO-251-3L	SVF3N80M	Pb free	Tube
SVF3N80F	TO-220F-3L	SVF3N80F	Pb free	Tube
SVF3N80D	TO-252-2L	SVF3N80D	Pb free	Tube
SVF3N80DTR	TO-252-2L	SVF3N80D	Pb free	Tape & Reel

ABSOLUTE MAXIMUM RATINGS (T_C=25°C unless otherwise noted)

Characteristics		Symbol	Rating		Unit
			SVF3N80M/D	SVF3N80F	
Drain-Source Voltage		V_{DS}	800		V
Gate-Source Voltage		V_{GS}	±30		V
Drain Current	T_C=25°C	I_D	3.0		A
	T_C=100°C		1.9		
Drain Current Pulsed		I_{DM}	12.0		A
Power Dissipation(T_C=25°C)		P_D	80	39	W
-Derate above 25°C			0.64	0.31	W/°C
Single Pulsed Avalanche Energy (Note 1)		E_{AS}	173		mJ
Operation Junction Temperature Range		T_J	-55～+150		°C
Storage Temperature Range		T_{stg}	-55～+150		°C

THERMAL CHARACTERISTICS

Characteristics	Symbol	Rating		Unit
		SVF3N80M/D	SVF3N80F	
Thermal Resistance, Junction-to-Case	$R_{\theta JC}$	1.56	3.21	°C/W
Thermal Resistance, Junction-to-Ambient	$R_{\theta JA}$	110	120	°C/W

ELECTRICAL CHARACTERISTICS (T_C=25°C unless otherwise noted)

Characteristics	Symbol	Test conditions	Min.	Typ.	Max.	Unit
Drain -Source Breakdown Voltage	B_{VDSS}	V_{GS}=0V, I_D=250μA	800	--	--	V
Drain-Source Leakage Current	I_{DSS}	V_{DS}=800V, V_{GS}=0V	--	--	10	μA
Gate-Source Leakage Current	I_{GSS}	V_{GS}=±30V, V_{DS}=0V	--	--	±100	nA
Gate Threshold Voltage	$V_{GS(th)}$	V_{GS}= V_{DS}, I_D=250μA	2.0	--	4.0	V
Static Drain- Source On State Resistance	$R_{DS(on)}$	V_{GS}=10V, I_D=1.5A	--	3.8	4.8	Ω
Input Capacitance	C_{iss}	V_{DS}=25V,V_{GS}=0V, f=1.0MHZ	--	390.3	--	pF
Output Capacitance	C_{oss}		--	42.7	--	
Reverse Transfer Capacitance	C_{rss}		--	2.0	--	
Turn-on Delay Time	$t_{d(on)}$	V_{DD}=400V, I_D=3.0A, R_G=25Ω (Note 2,3)	--	13.87	--	ns
Turn-on Rise Time	t_r		--	30.53	--	
Turn-off Delay Time	$t_{d(off)}$		--	22.40	--	
Turn-off Fall Time	t_f		--	18.27	--	
Total Gate Charge	Q_g	V_{DS}=640V, I_D=3.0A, V_{GS}=10V (Note 2,3)	--	9.00	--	nC
Gate-Source Charge	Q_{gs}		--	2.46	--	
Gate-Drain Charge	Q_{gd}		--	3.74	--	

SOURCE-DRAIN DIODE RATINGS AND CHARACTERISTICS

Characteristics	Symbol	Test conditions	Min.	Typ.	Max.	Unit
Continuous Source Current	I_S	Integral Reverse P-N Junction Diode in the MOSFET	--	--	3.0	A
Pulsed Source Current	I_{SM}		--	--	12.0	
Diode Forward Voltage	V_{SD}	I_S=3.0A,V_{GS}=0V	--	--	1.4	V
Reverse Recovery Time	T_{rr}	I_S=3.0A,V_{GS}=0V, dI_F/dt=100A/μS	--	190	--	ns
Reverse Recovery Charge	Q_{rr}		--	0.53	--	μC

Notes:

1. L=30mH, I_{AS}=3.15A, V_{DD}=100V, R_G=25Ω, starting T_J=25°C;
2. Pulse Test: Pulse width ≤300μs,Duty cycle≤2%;
3. Essentially independent of operating temperature.

TYPICAL CHARACTERISTICS

Figure 1. On-Region Characteristics

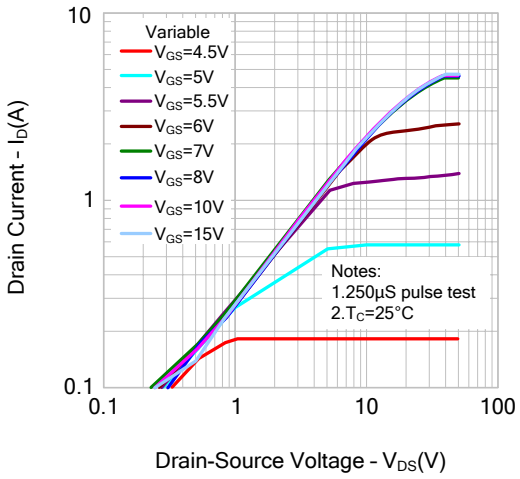

Figure 2. Transfer Characteristics

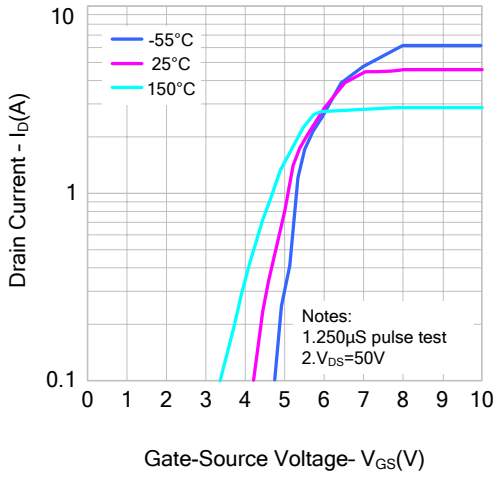

Figure 3. On-Resitance Variation vs. Drain Current and Gate Voltage

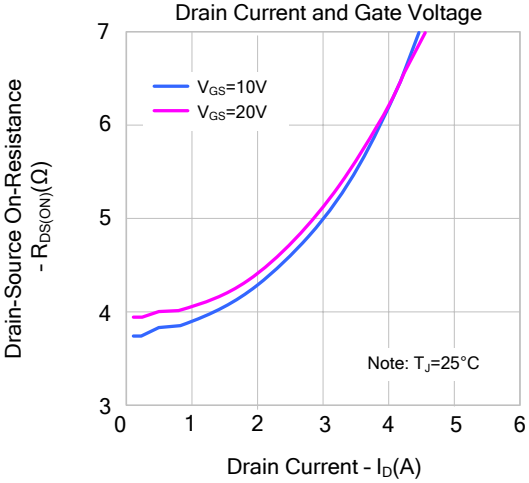

Figure 4. Body Diode Forward Voltage Variation vs. Source Current and Temperature

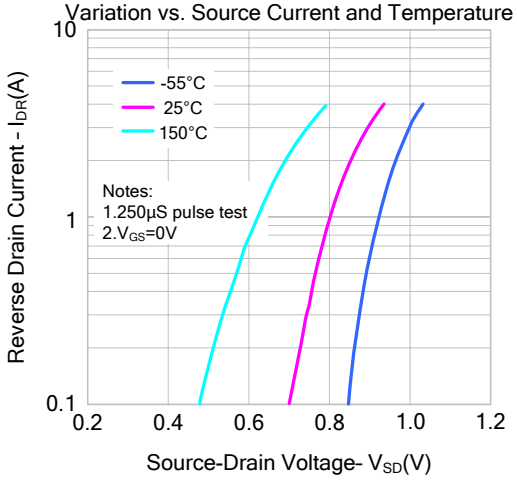

Figure 5. Capacitance Characteristics

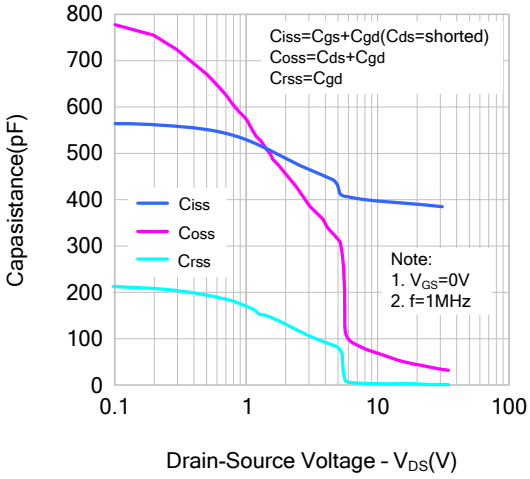

Figure 6. Gate Charge Characteristics

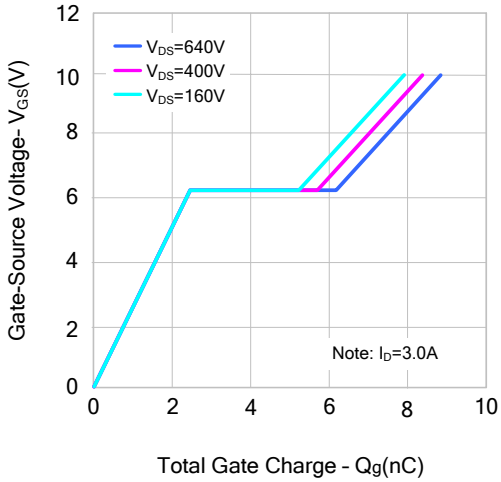

TYPICAL CHARACTERISTICS(continued)

Figure 7. Breakdown Voltage Variation vs. Temperature

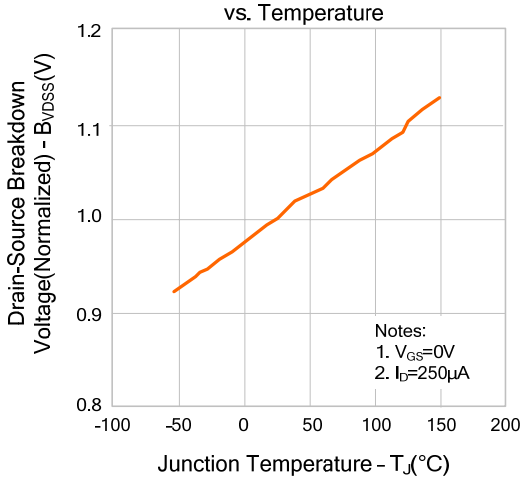

Figure 8. On-resistance Variation vs. Temperature

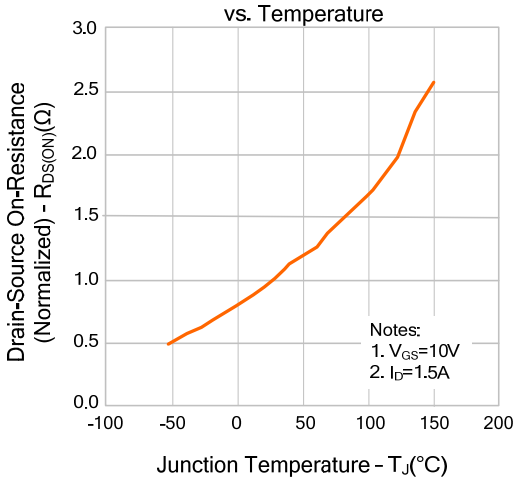

Figure 9-1. Max. Safe Operating Area(SVF3N80M/D)

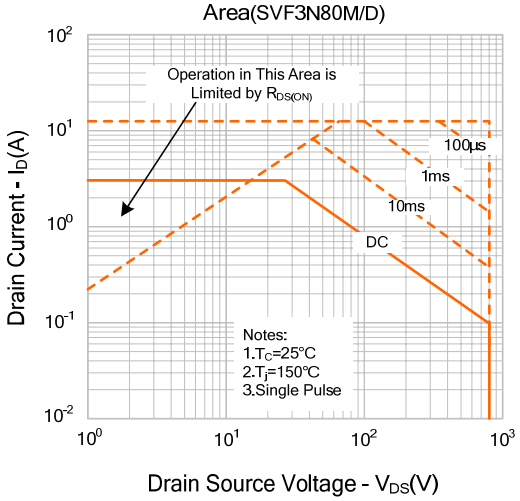

Figure 9-2. Max. Safe Operating Area(SVF3N80F)

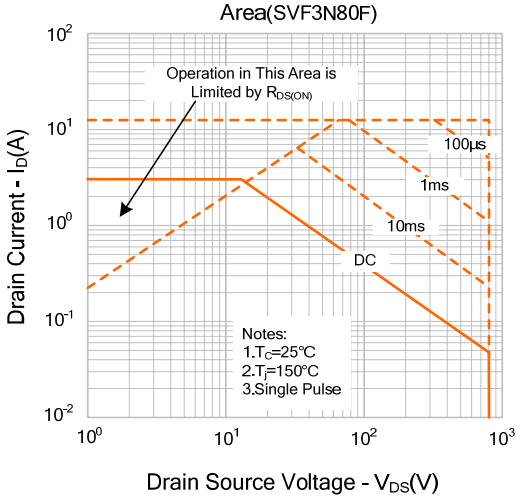

Figure 10. Maximum Drain Current vs. Case Temperature

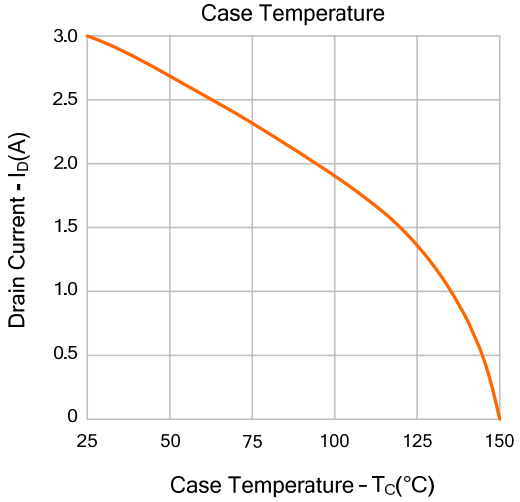

TYPICAL TEST CIRCUIT

Gate Charge Test Circuit & Waveform

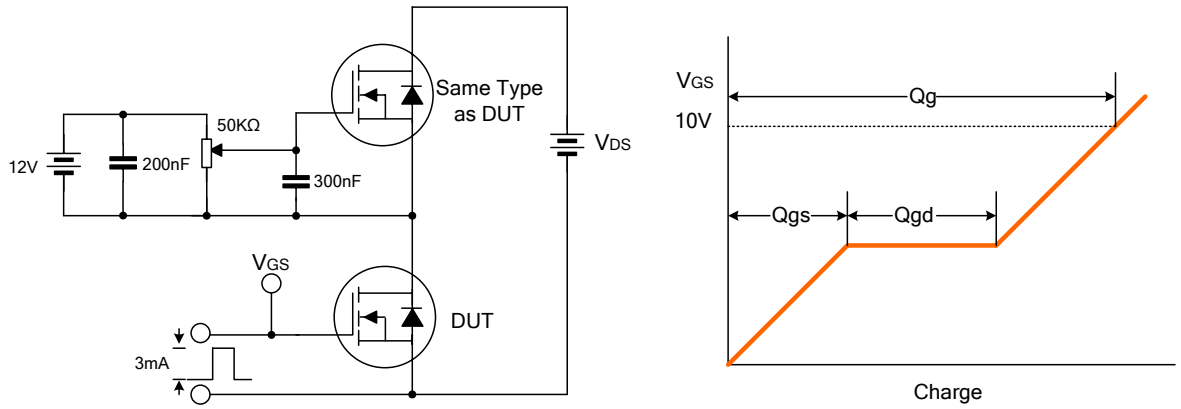

Resistive Switching Test Circuit & Waveform

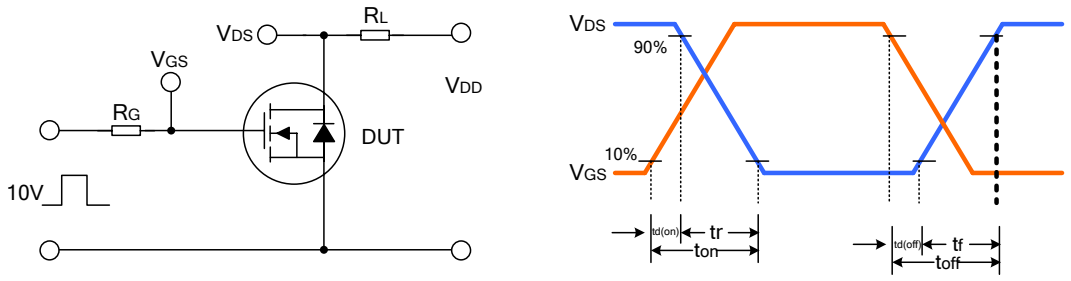

Unclamped Inductive Switching Test Circuit & Waveform

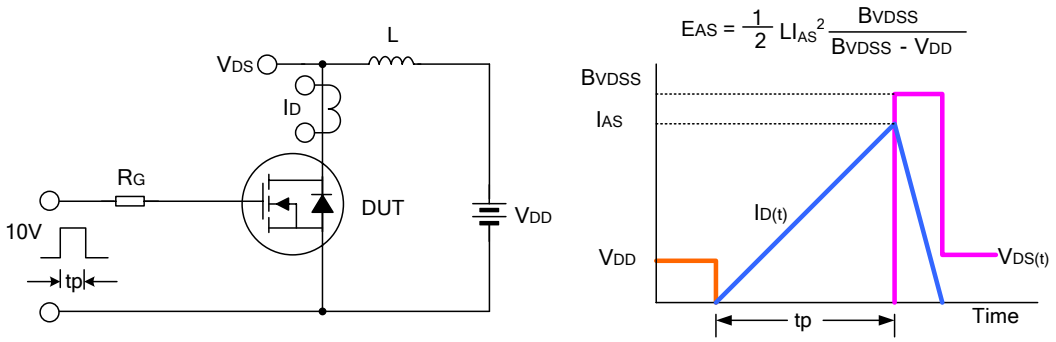

PACKAGE OUTLINE

TO-251-3L UNIT: mm

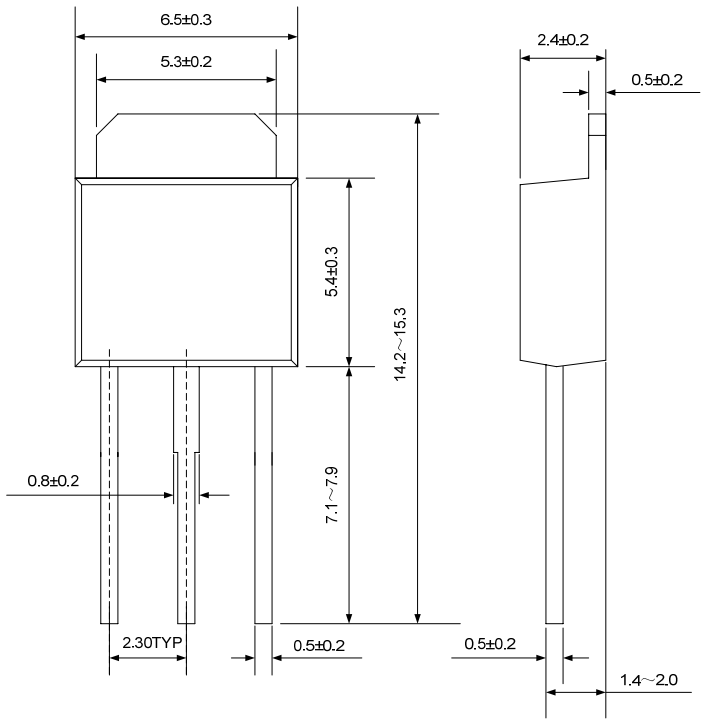

TO-252-2L UNIT: mm

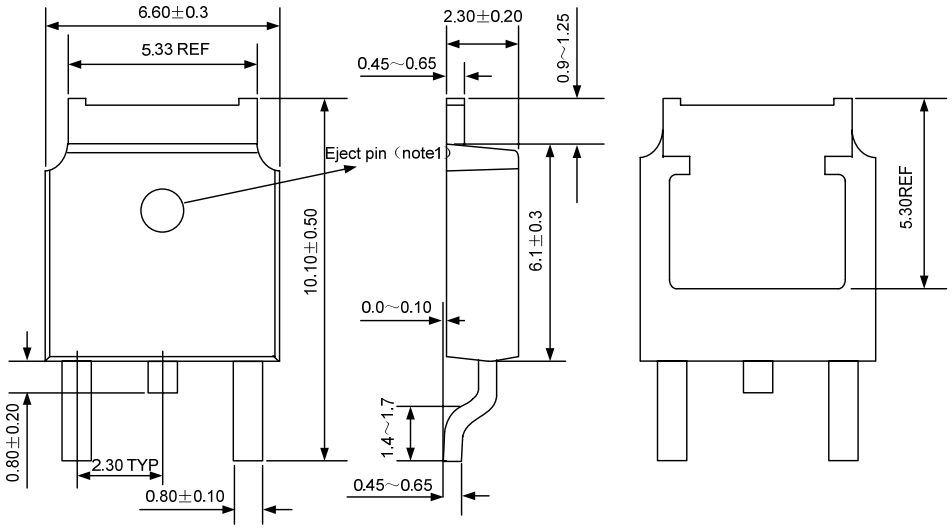

NOTE1 : There are two conditions for this position:has an eject pin or has no eject pin.

PACKAGE OUTLINE (continued)

TO-220F-3L(One) UNIT: mm

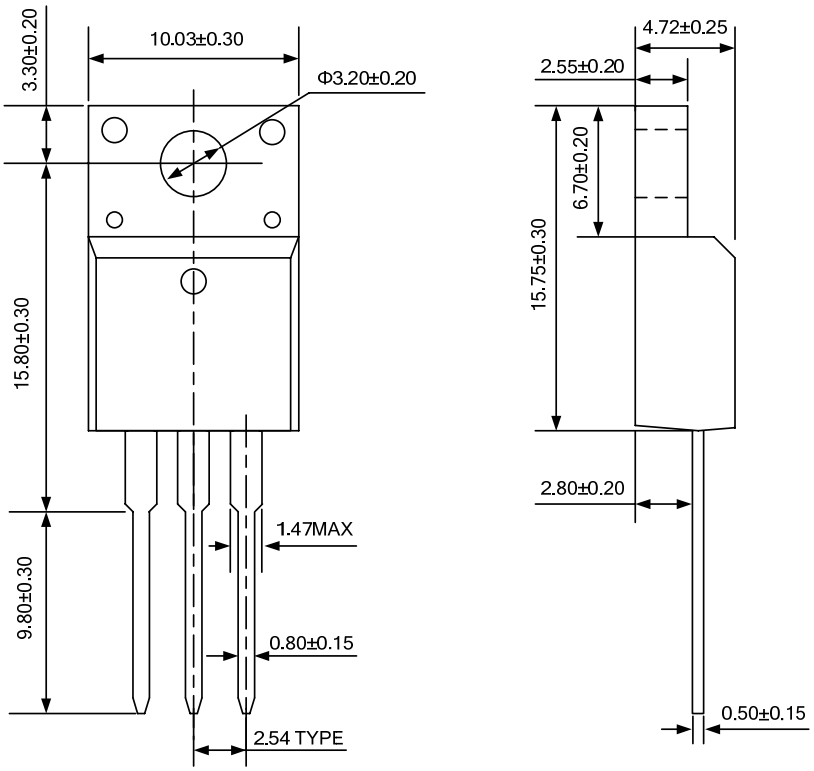

TO-220F-3L(Two) UNIT: mm

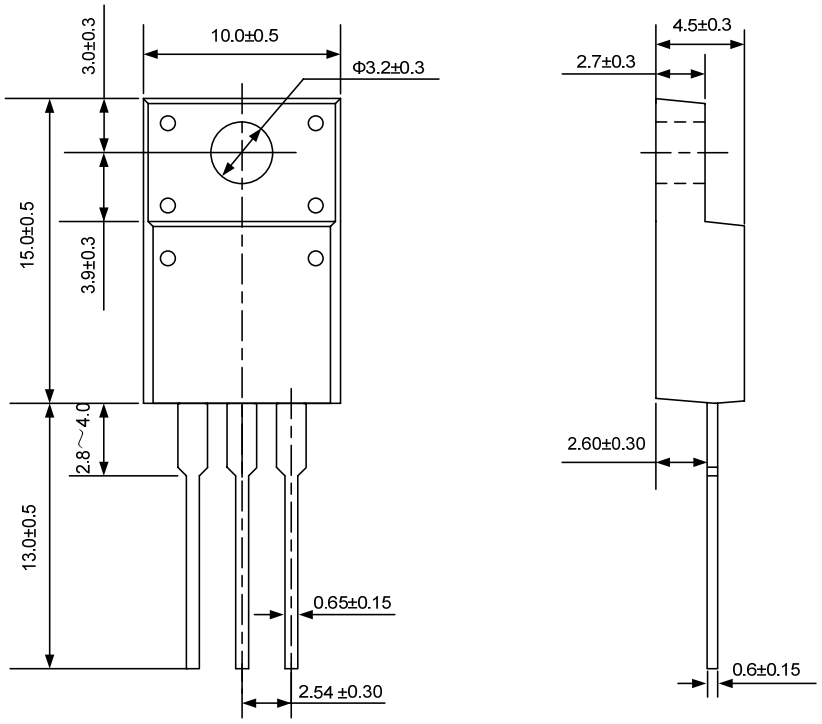

Disclaimer:

- **Silan reserves the right to make changes to the information herein for the improvement of the design and performance without further notice! Customers should obtain the latest relevant information before placing orders and should verify that such information is complete and current.**
- **All semiconductor products malfunction or fail with some probability under special conditions. When using Silan products in system design or complete machine manufacturing, it is the responsibility of the buyer to comply with the safety standards strictly and take essential measures to avoid situations in which a malfunction or failure of such Silan products could cause loss of body injury or damage to property.**
- **Silan will supply the best possible product for customers!**

ATTACHMENT

Revision History

Date	REV	Description	Page
2011.03.15	1.0	Original	